GALASSI&ORTOLANI

VALVESMANUFACTUREDIVISION

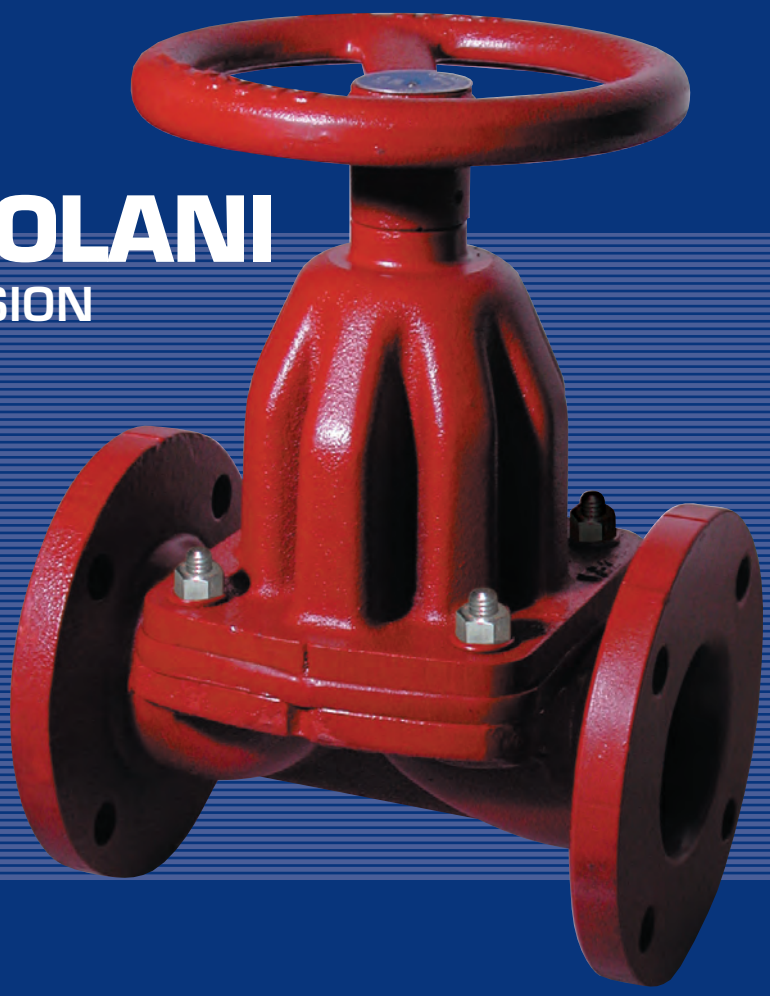

PINCHVALVES
BUTTERFLYVALVES
DIAPHRAGMVALVES
CHECKVALVES
BALLVALVES
GATEVALVES
THERMOPLASTICVALVES

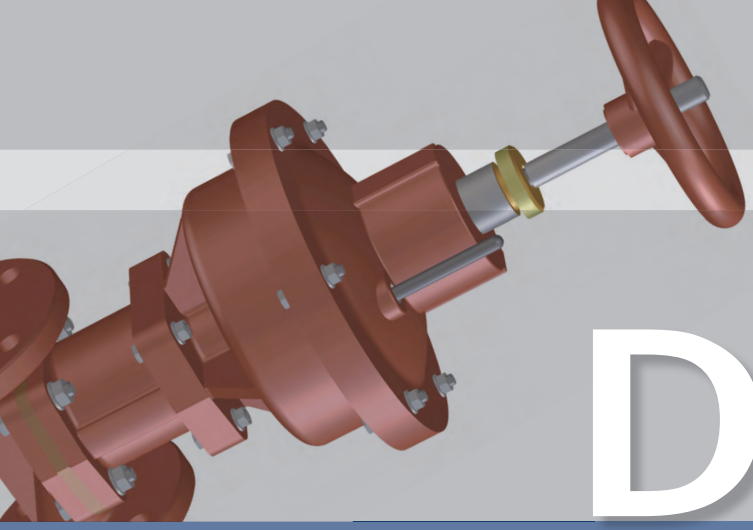

DIAPHRA

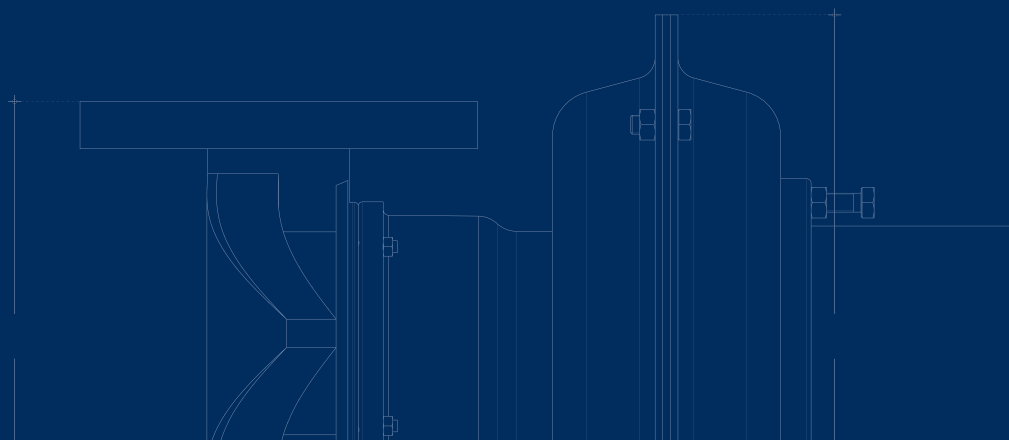

AGM VALVES

THE ANSWER TO PROBLEMS OF: CORROSION, ABRASION, CLOGGING, CONTAMINATION, VACUUM & GAS HANDLING

G&O Diaphragm valve do not incorporate any stuffing box and are leaktight on all liquids, slurries, granular materials, powders, pastes, gases, acids etc..
Diaphragm (internal membrane) is supported during opening and closing, and is easily replaceable without any special tools.
The wide range of available elastomer materials enable an appropriate selection for each application and is a guarantee of perfect resistance to corrosion and abrasion.
Sanitary type valves are recommended for ultimate sterility in pharmaceuticals and biotechnology industries. Using perfectly contoured self-draining stainless steel bodies and PTFE faced diaphragms, resulting in valves totally free of bacteria traps

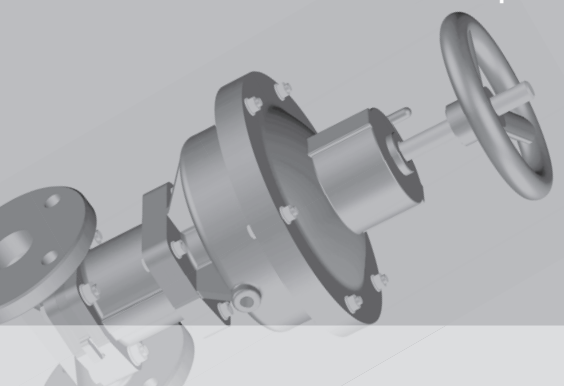

PRODUCT FEATURES

- Weir type, conveyed flow way - Full bore type, straight through way
- Sanitary type
- Flanged valves sized from 1/2" through 14"
- Sanitary type (buttweld, screwed, tri-clamp, socket) sized from 1/2" through 4"
- manual, pneumatic and electric operators

PERFORMANCE FEATURES

- Long diaphragm life: no metallic inserts to strain the elastomers
- Low pressure loss
- Diaphragm supported during opening and closing: hence the possibility of under vacuum operation
- Quick and easy replacement of diaphragm
- Epoxy painted, valve bodies protected with an anti-acid varnish

BODY VALVE MATERIALS

- cast iron gg20 or gg 25 (uni iso 185/uni 5007) as per astma126
- ductil or spheroidal cast iron gs400/12 (uni iso 1083/uni4544) as per astm a536
- cast steel wcb (a216m-93) as per astm a216 wcb
- carbon steel lcb as per astm a352
- stainless steel 316 (a743m-98) as per cf8m
- pure aluminium
- PVDF, PPH

BODY VALVE LINING MATERIALS

- Soft rubber
- Butyl rubber
- Hard rubber (ebonite)
- ECTFE/HALAR
- PFA
- ETFE
- Galvanized (laid in an hot zinc bath)

BODY EXTERNAL & INTERNAL SURFACE

(for sanitary type only)

- Satin or Vacuublast finished for external
- Vacuublast, Satin, Mirror or Supermirror finished for internal

MATERIAL DIAPHRAGM

- Natural rubber
- White natural rubber
- Neoprene
- EPDM
- Viton
- Butyl
- Nitrile
- Hypalon
- Silicone
- Neoprene/Silicon (mixed)
- PTFE faced

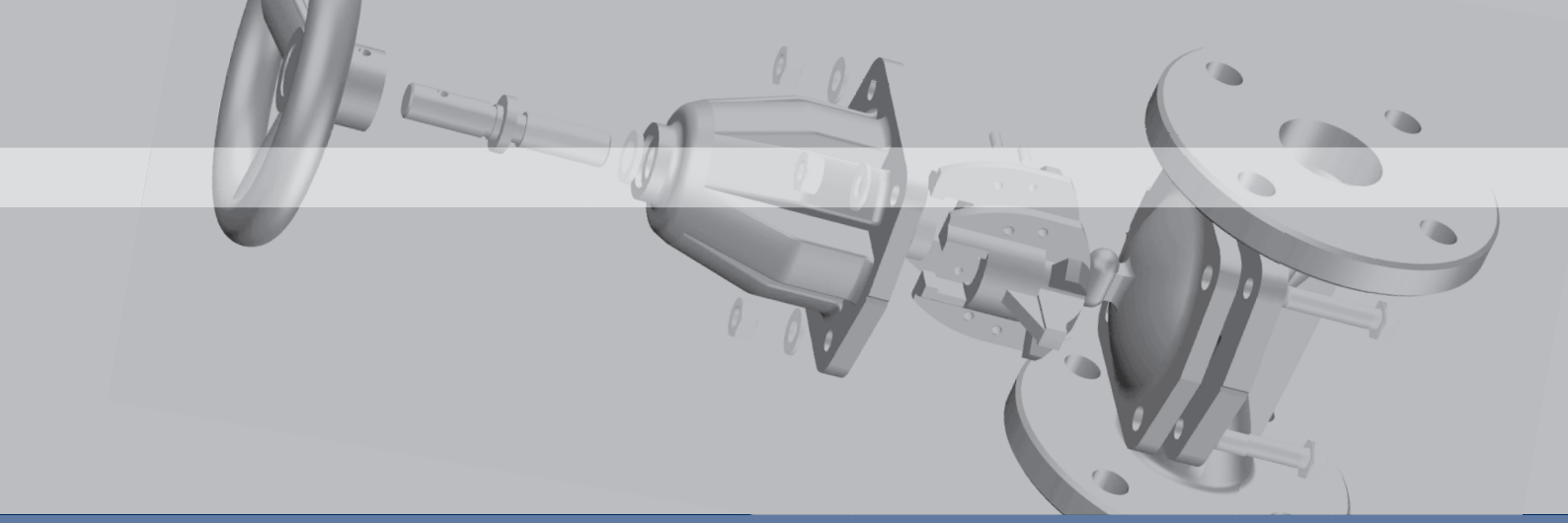

DESIGN/DIMENSIONS APPLICABLE STANDARD

- BS 5156
- DIN 3202 F1

END CONNECTIONS APPLICABLE STANDARD

- ANSI/ASME B16.5 Flanged Valves
- ANSI/ASME B16.1 Flanged Fittings
- ANSI/ASME B1.20.1 (NPT)Pipe Threads
- ANSI/ASME B16.34 Steel Valves
- ANSI/ASME B16.11 Socketweld Fittings
- MSS SP-88 Diaphragm Valves
- ANSI/ASME B16.25 Buttweld Ends

CERTIFICATES AVAILABLE

- EN 10204 3.1.B
- EN 10204 2.2
- GHOST-R

INSPECTION TESTS AVAILABLE BY

- SGS GLOBAL TRADE SOLUTIONS
- ITS INTERTEK TESTING SERVICES
- BV BUREAU VERITAS

MAJOR MARKETS SERVED

- Chemical process
- Power generation
- Water treatment
- Mining
- Pulp & Paper
- Nuclear
- Pharmaceutical
- Food & Beverage
- Bioprocess

OPTIONS

- Limit switches
- Solenoid valve
- Position indicator
- Air filter regulator
- 3:15 PSI positioner
- 4:20mA electropneumatic positioner or 4:20mA electronic transmitter of position 30°-90°angle
- Mono/Triphase AC motor (240V/50Hz through 400V/50Hz)

G&O SERIES PNEUMATIC ACTUATORS

Piston type air operators line offer a great solution to a wide range of actuation situations. They are exclusively designed to G&O series butterfly valves and can be mounted in any position. These actuators are builted in aluminium and are available in three options:

- single effect acting - fail to close (air to open)
- single effect acting - fail to open (air to close)
- double effect acting – fail to open & fail to close

Single effect acting actuators are fitted by an extractable handwheel for security.

Model GS51 HW

DIAPHRAGM VALVES

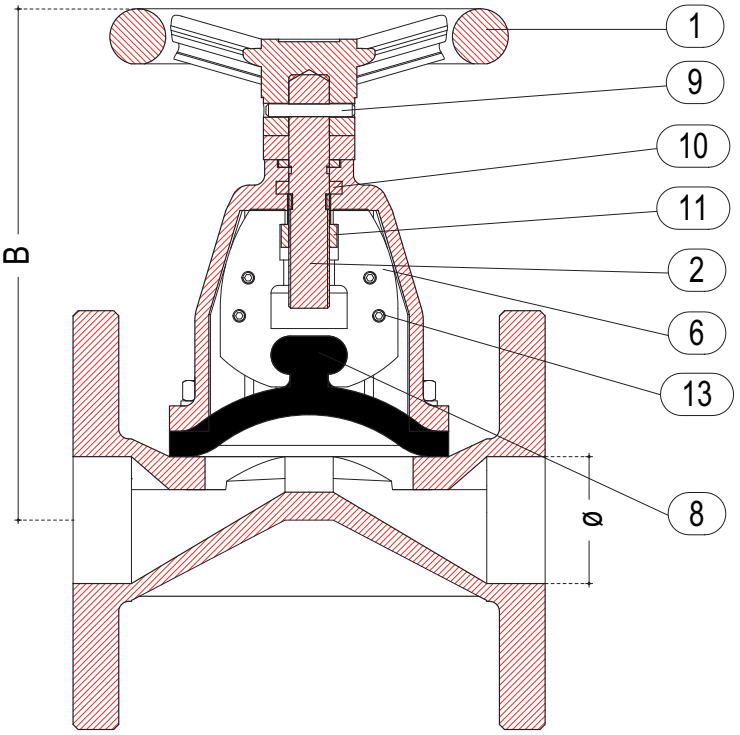

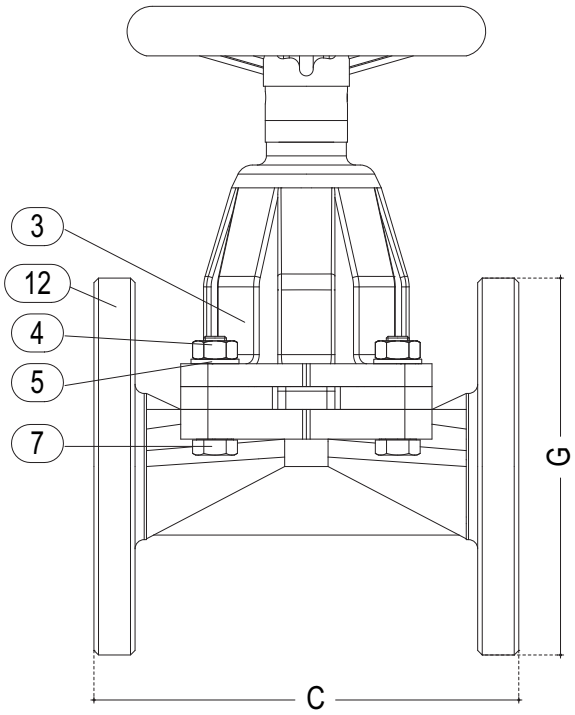

DETAILS	
1	CONTROL WHEEL
2	LEAD SCREW
3	COVER
4	HEXAGON NUT
5	WASHER
6	PLUG
7	STUD BOLT
8	DIAPHRAGM
9	SOCKET
10	GASKET
11	BRONZE NUT
12	VALVE BODY
13	CLAMPING SCREW FOR BUSHING

PRESSURE DETAILS UNI_1284

DN	P.N.	HYDRAULIC TEST kg/cm² OPEN	HYDRAULIC TEST kg/cm² CLOSE	WORKING PRESSURE kg/cm²
15	14	15	14	13
20	14	15	14	13
25	14	15	14	13
30	13	15	13	12
40	12,5	15	12,5	11,5
50	12,5	15	12,5	11,5
60	11	15	11	10
75	10,5	15	10,5	9,5
100	10,5	15	10,5	9,5
125	9	13	9	8
150	8,7	13	8,7	7,7
200	7	13	7	6
250	6	8	6	6
300	6	8	6	6

NOTE: For different pressure details please ask the DPT

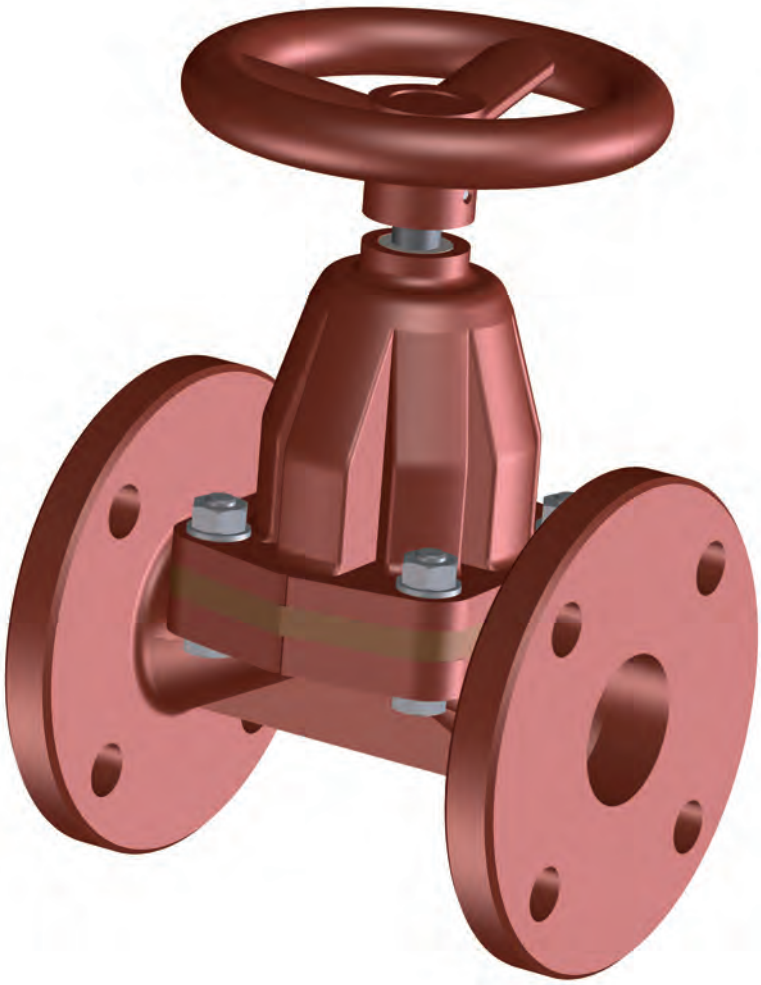

WEIGHT KG	
C.I unlined	C.I. ebonite lined
2,300	2,400
3,800	3,900
4,000	4,100
6,600	6,700
8,000	8,300
12,000	12,400
17,000	17,600
23,000	24,000
36,500	98,000
56,000	55,700
76,500	76,200
144,000	142,000
225,000	226,000
330,000	350,000

DIMENSIONS C.I. UNLINED				
Ø	B	C	G (UNI)	G (ASA)
15	87,5	108	95	90
20	112,5	117	105	98
25	117,5	127	115	108
30	135	146	140	118
40	170	159	150	127
50	187,5	190	165	152
60	232,5	217	185	178
75	260	254	200	190
100	315	305	220	229
125	400	356	250	254
150	442,5	406	285	280
200	585	520	340	343
250	655	635	395	406
300	718	749	445	483

DIMENSIONS C.I. EBONITE LINED				
Ø	B	C	G (UNI)	G (ASA)
15	92,5	114	95	90
20	117,5	123	105	98
25	122,5	133	115	108
30	140	152	140	118
40	175	165	150	127
50	192,5	196	165	152
60	237,5	227	185	178
75	265	260	200	190
100	320	313	220	229
125	405	364	250	254
150	447,5	414	285	280
200	590	530	340	343
250	660	645	395	406
300	723	759	445	483

Model GS51 REG

DIAPHRAGM VALVES

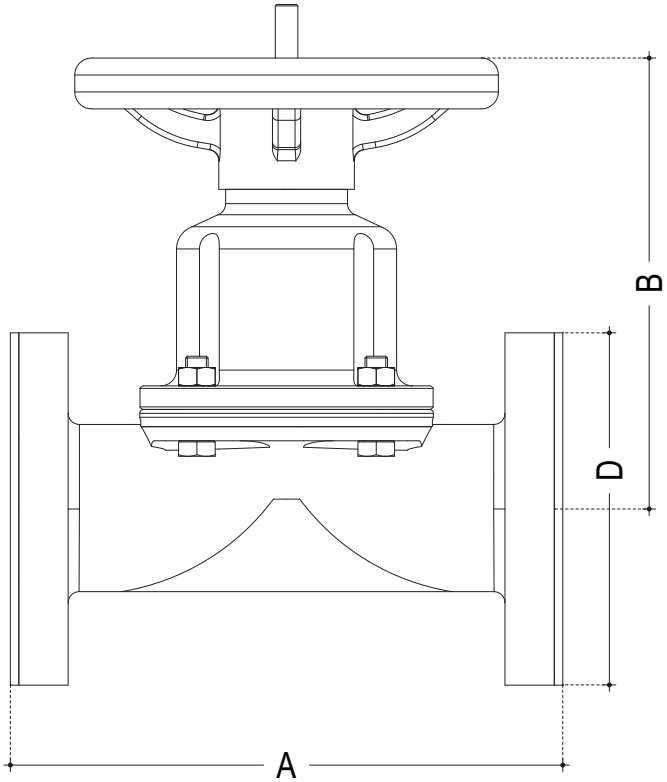

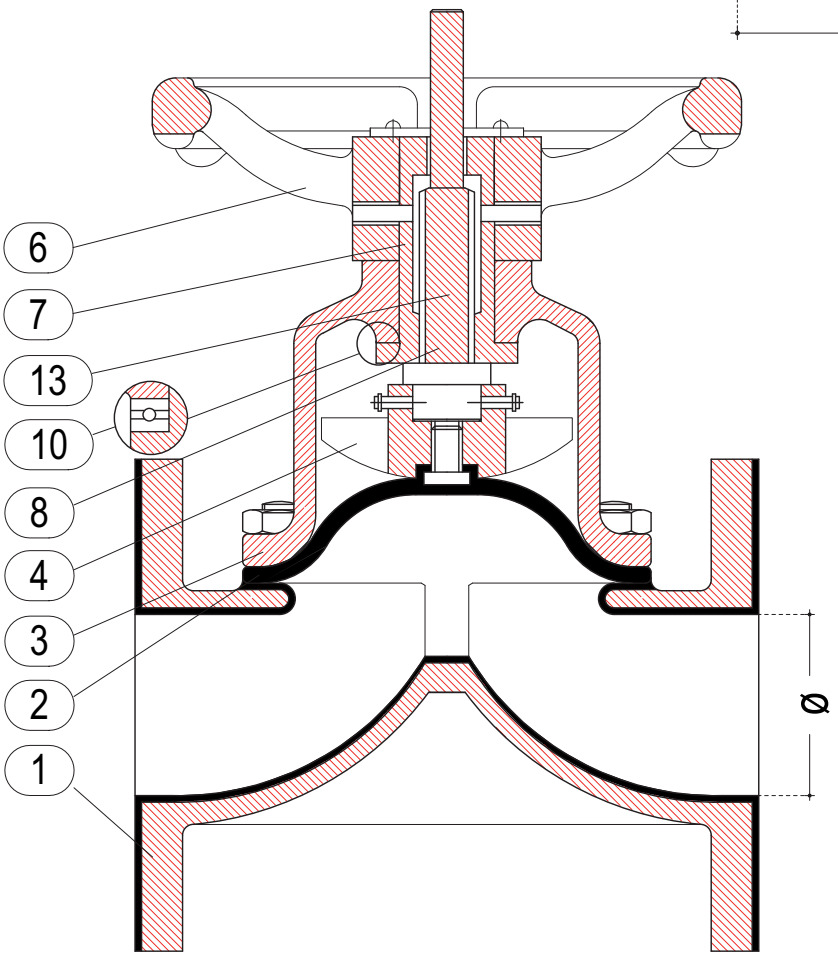

DETAILS	
1	BODY
2	DIAPHRAGM
3	BONNET
4	COMPRESSOR
6	HANDWHEEL
7	STEM BUSHING
8	STEM
10	THRUST BEARING
13	LUBRICATION FITTING

WEIGHT KG	
C.I unlined	C.I. ebonite lined
2,400	2,400
2,800	2,800
4,200	4,200
4,500	4,500
5,500	5,500
10,000	10,000
15,000	15,000
25,000	25,000
32,000	32,000
55,000	55,000
85,000	85,000
144,000	144,000
188,000	188,000
330,000	330,000

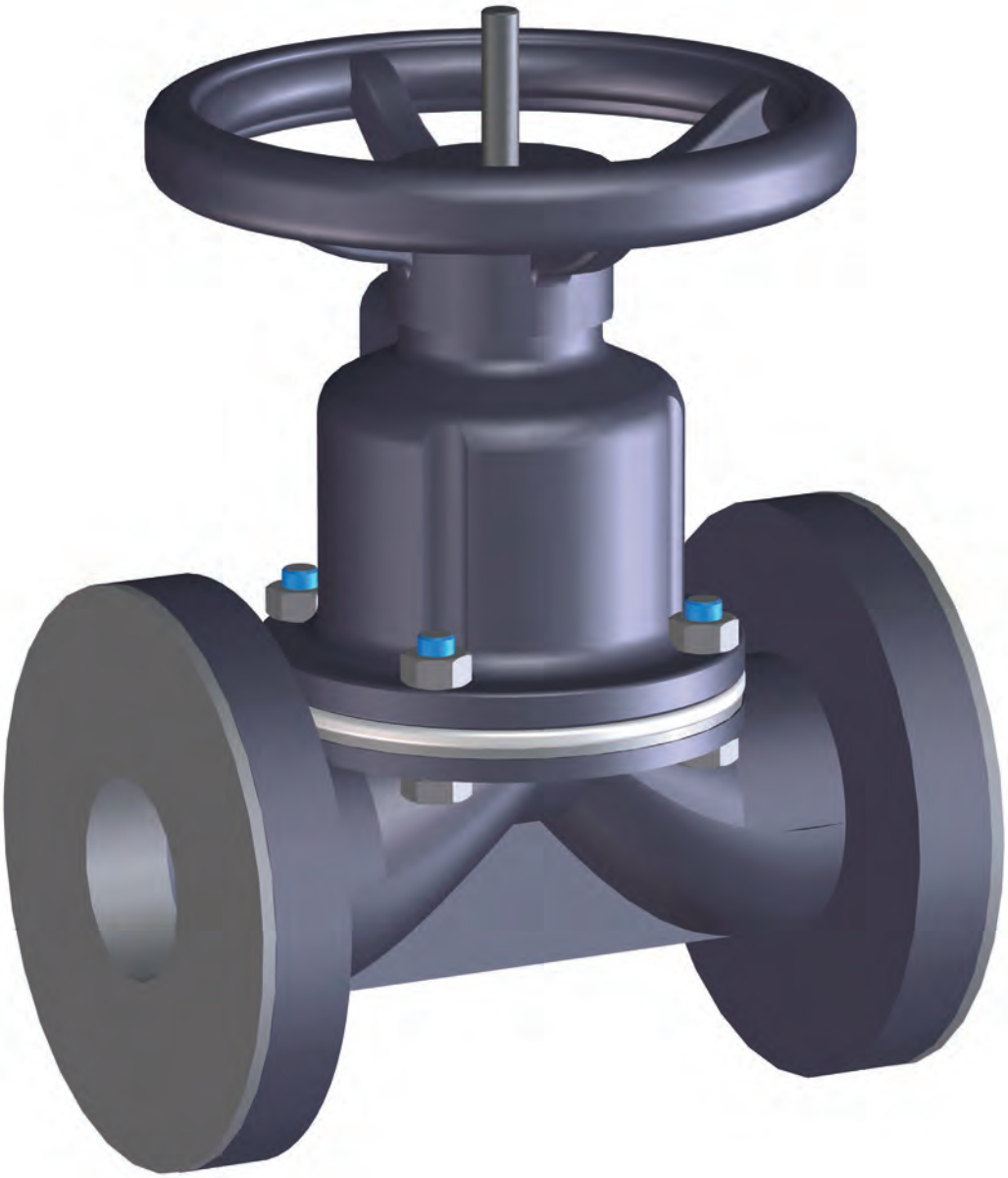

TEST PRESSURE IN BAR				
PRESSURE RATING	PN16	PN10	PN7	PN5
HYD SHELL	24	15	10,5	9
SEAT	16	10	7	6
AIR SEAT	5,0	5,0	5,0	5,0

* pressure rating: for size 15 to 50 mm 16 bar, for size 65 to 150 mmm 10 bar, for size 200mm 7 bar

DIMENSIONS C.I. UNLINED			
Ø	A	B	D
15	108	89	95
20	117	97	105
25	127	111	115
30	146	112	133
40	159	150	150
50	190	157	165
60	216	177	185
75	254	230	200
100	305	252	229
125	356	302	254
150	406	364	285
200	521	475	343
250	635	580	406
300	749	684	483
350	749	825	533

DIMENSIONS C.I. EBONITE LINED			
Ø	A	B	D
15	114	92	95
20	123	100	105
25	133	114	115
30	152	115	133
40	165	153	150
50	196	160	165
60	222	180	185
75	260	233	200
100	313	256	229
125	364	306	254
150	414	368	285
200	529	479	343
250	645	585	406
300	759	689	483
350	759	830	533

Model GS51FB REG

DIAPHRAGM VALVES

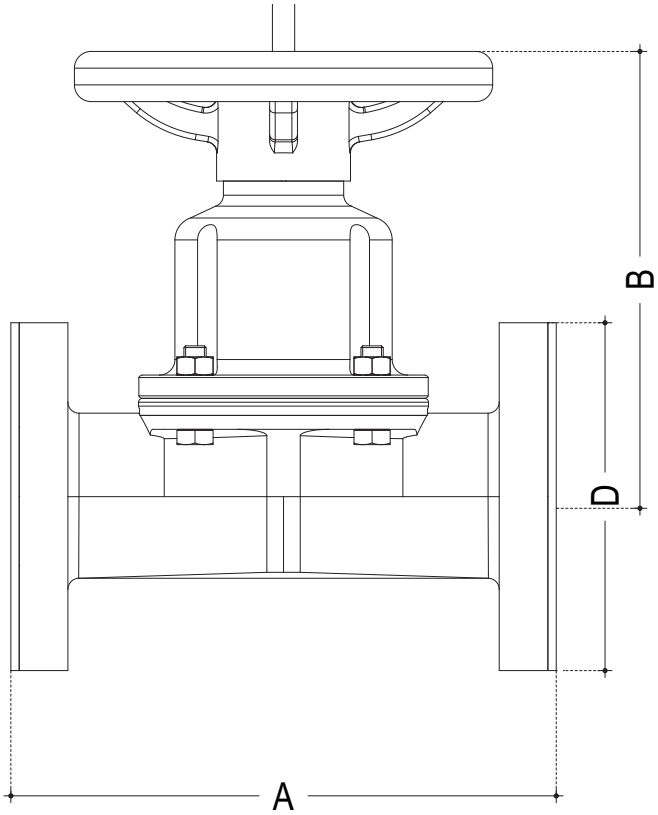

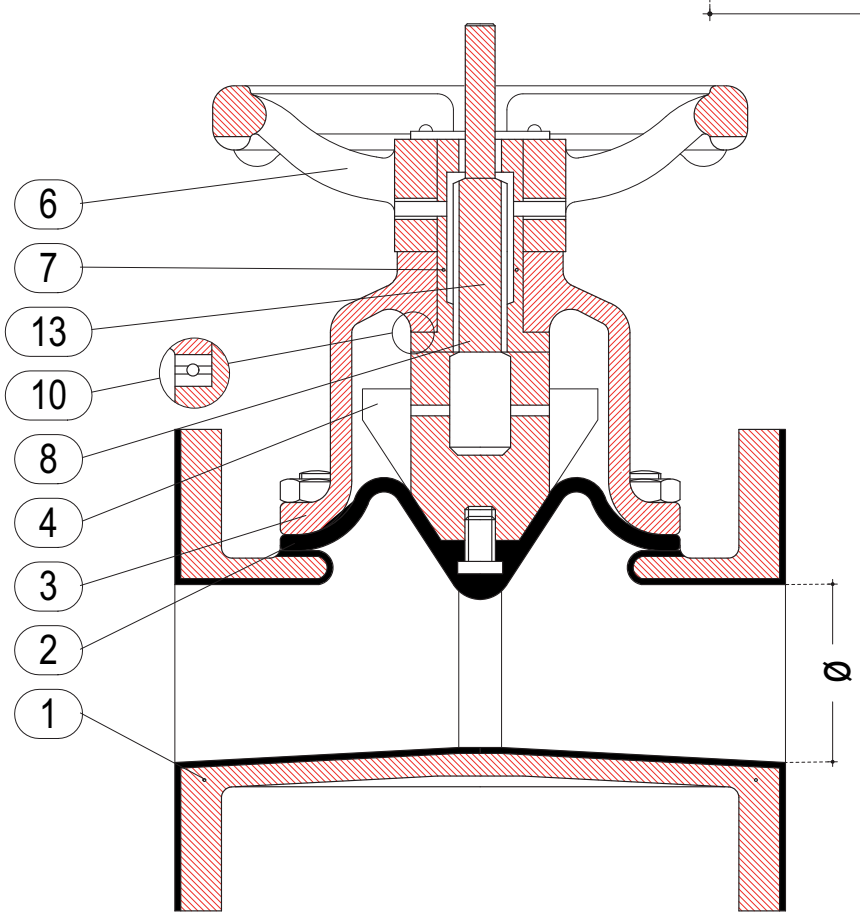

DETAILS	
1	BODY
2	DIAPHRAGM
3	BONNET
4	COMPRESSOR
6	HANDWHEEL
7	STEM BUSHING
8	STEM
10	THRUST BEARING
13	LUBRICATION FITTING

TEST PRESSURE IN BAR			
PRESSURE RATING	PN10	PN7	PN5
HYD SHELL	15	10,5	6
SEAT	10	7	5
AIR SEAT	5,0	5,0	5,0

* pressure rating: for size 15 to 100 mm 10 bar, for size 125 7 bar, for size 150mm to 300 mm 5 bar

DIMENSIONS C.I. UNLINED			
Ø	A	B	D
15	108	87	95
20	117	87	105
25	127	109	115
30	146	109	133
40	159	109	150
50	190	143	165
65	216	174	185
80	254	202	200
100	305	240	229
125	356	268	254
150	406	429	285
200	521	416	343
250	635	540	406
300	749	635	483

DIMENSIONS C.I. EBONITE LINED			
Ø	A	B	D
15	114	90	95
20	123	90	105
25	133	112	115
30	152	112	140
40	165	112	150
50	196	146	165
65	222	177	185
80	260	205	200
100	313	244	229
125	364	272	254
150	414	433	285
200	529	420	343
250	645	545	406
300	759	640	483

Model GS51DIN HW

DIAPHRAGM VALVES

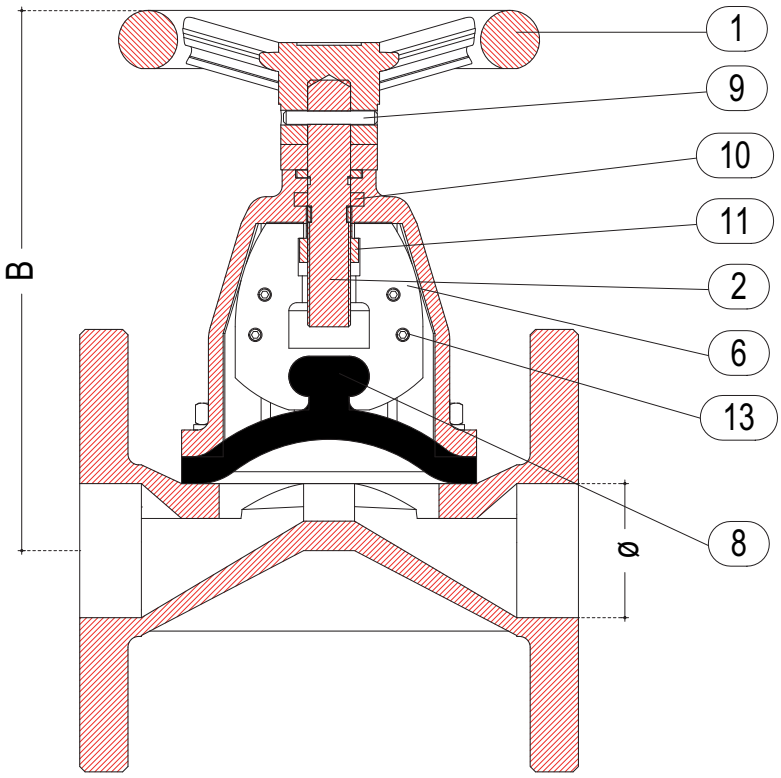

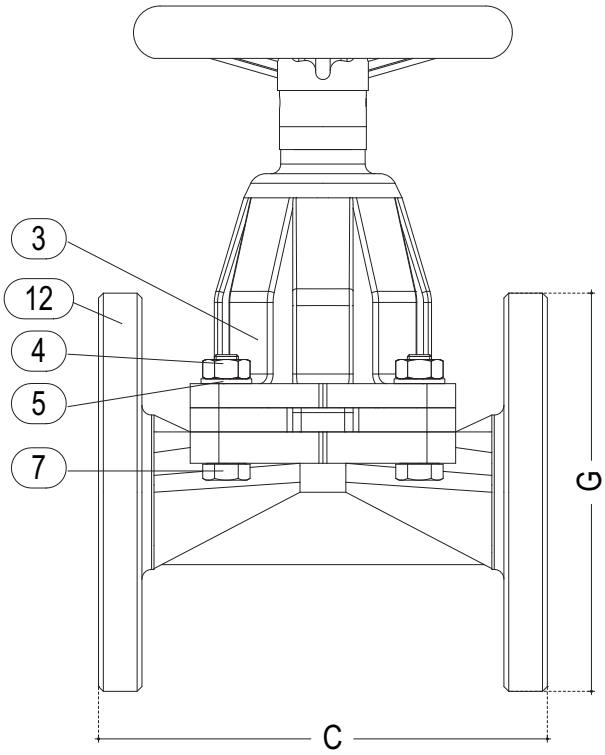

DETAILS	
1	CONTROL WHEEL
2	LEAD SCREW
3	COVER
4	HEXAGON NUT
5	WASHER
6	PLUG
7	STUD BOLT
8	DIAPHRAGM
9	SOCKET
10	GASKET
11	BRONZE NUT
12	VALVE BODY
13	CLAMPING SCREW FOR BUSHING

PRESSURE DETAILS UNI_1284

DN	P.N.	HYDRAULIC TEST kg/cm² OPEN	HYDRAULIC TEST kg/cm² CLOSE	WORKING PRESSURE kg/cm²
15	14	15	14	13
20	14	15	14	13
25	14	15	13	12
30	13	15	13	12
40	12,5	15	12,5	11,5
50	12,5	15	12,5	11,5
60	11	15	11	10
75	10,5	15	10,5	9,5
100	10,5	15	10,5	9,5
125	9	13	9	8
150	8,7	13	8,7	7,7
200	7	13	7	6
250	6	8	6	6
300	6	8	6	6

NOTE: For different pressure details please ask the DPT

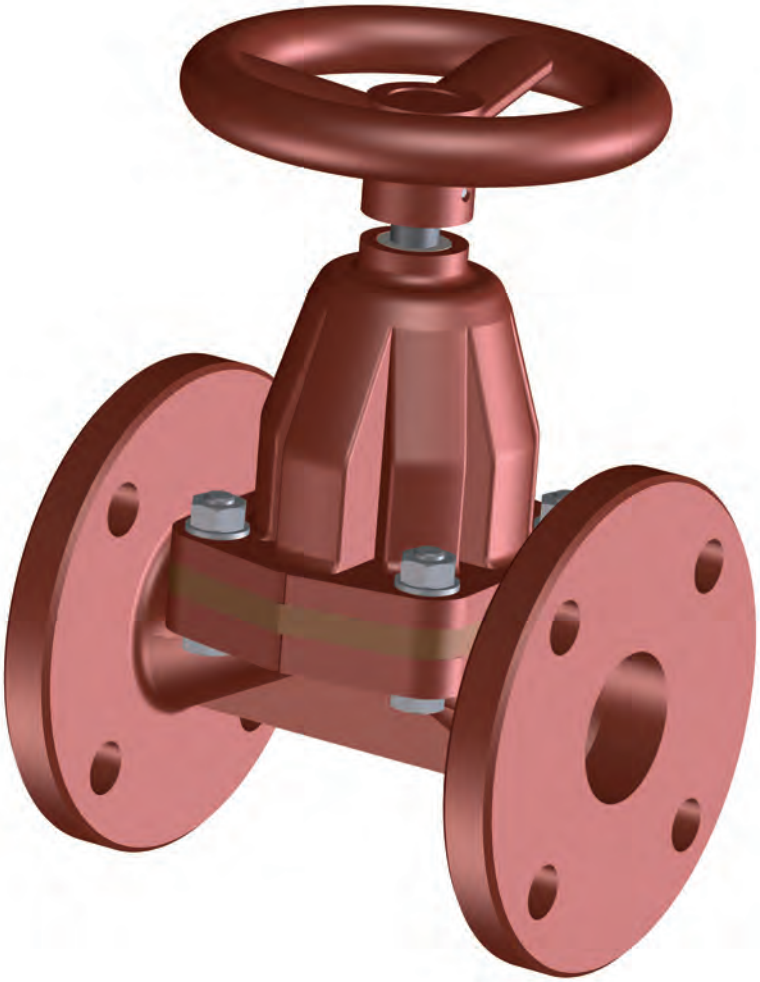

WEIGHT KG C.I unlined	C.I. ebonite lined
2,100	2,300
4,000	4,300
4,500	4,800
7,500	8,000
8,500	8,500
12,200	13,000
18,000	19,500
26,000	28,000
39,000	41,000
57,000	60,000
75,000	89,000
155,000	164,000
242,000	250,000
340,000	350,000

DIMENSIONS C.I. UNLINED

Ø	B	C	G (UNI)	G (ASA)
15	87,5	130	95	90
20	112,5	150	105	98
25	117,5	160	115	108
30	135	180	140	118
40	170	200	150	127
50	187,5	230	165	152
60	232,5	280	185	178
75	260	310	200	190
100	315	350	220	229
125	400	400	250	254
150	442,5	480	285	280
200	585	590	340	343
250	655	730	395	406
300	718	850	445	483

DIMENSIONS C.I. EBONITE LINED

Ø	B	C	G (UNI)	G (ASA)
15	92,5	130	95	90
20	117,5	150	105	98
25	122,5	160	115	108
30	140	180	140	118
40	175	200	150	127
50	192,5	230	165	152
60	237,5	290	185	178
75	265	310	200	190
100	320	350	220	229
125	405	400	250	254
150	447,5	480	285	280
200	590	600	340	343
250	660	730	395	406
300	723	850	445	483

Model GS51DIN REG

DIAPHRAGM VALVE

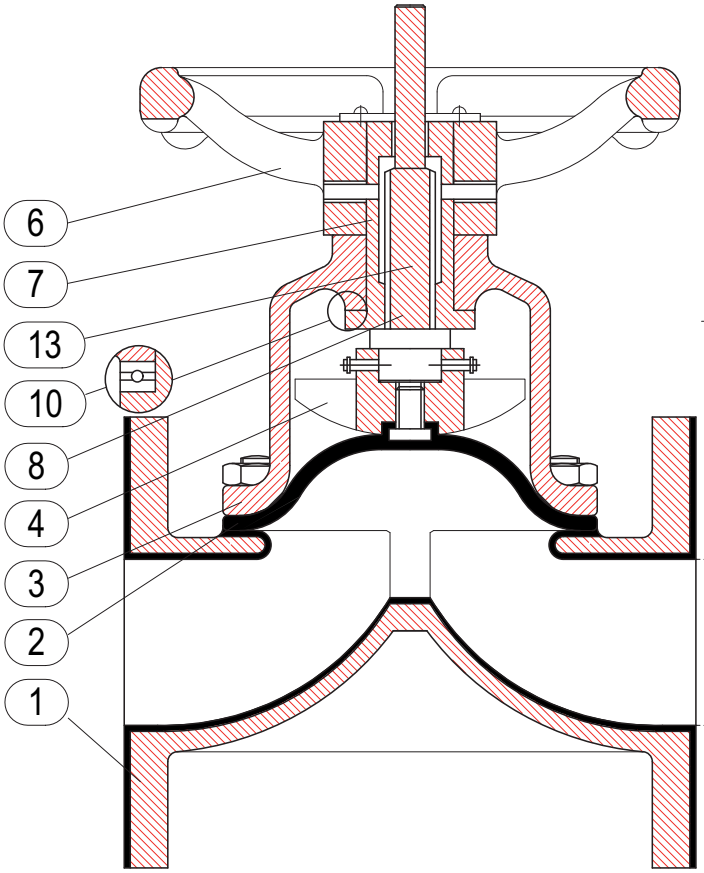

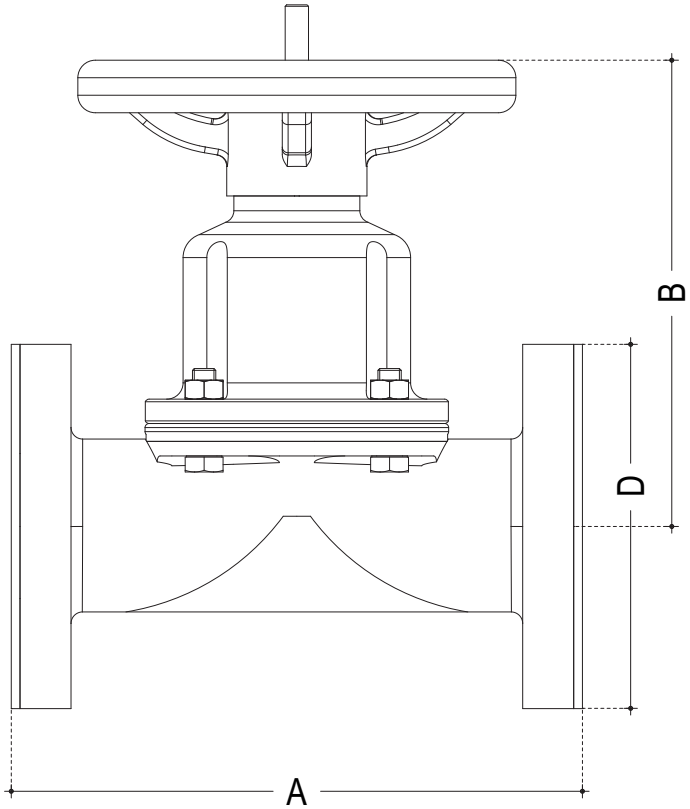

DETAILS	
1	BODY
2	DIAPHRAGM
3	BONNET
4	COMPRESSOR
6	HANDWHEEL
7	STEM BUSHING
8	STEM
10	THRUST BEARING
13	LUBRICATION FITTING

TEST PRESSURE IN BAR				
PRESSURE RATING	PN16	PN10	PN7	PN5
HYD SHELL	24	15	10,5	9
SEAT	16	10	7	6
AIR SEAT	5,0	5,0	5,0	5,0

* pressure rating: for size 15 to 50 mm 16 bar, for size 65 to 150 mmm 10 bar, for size 200mm 7 bar

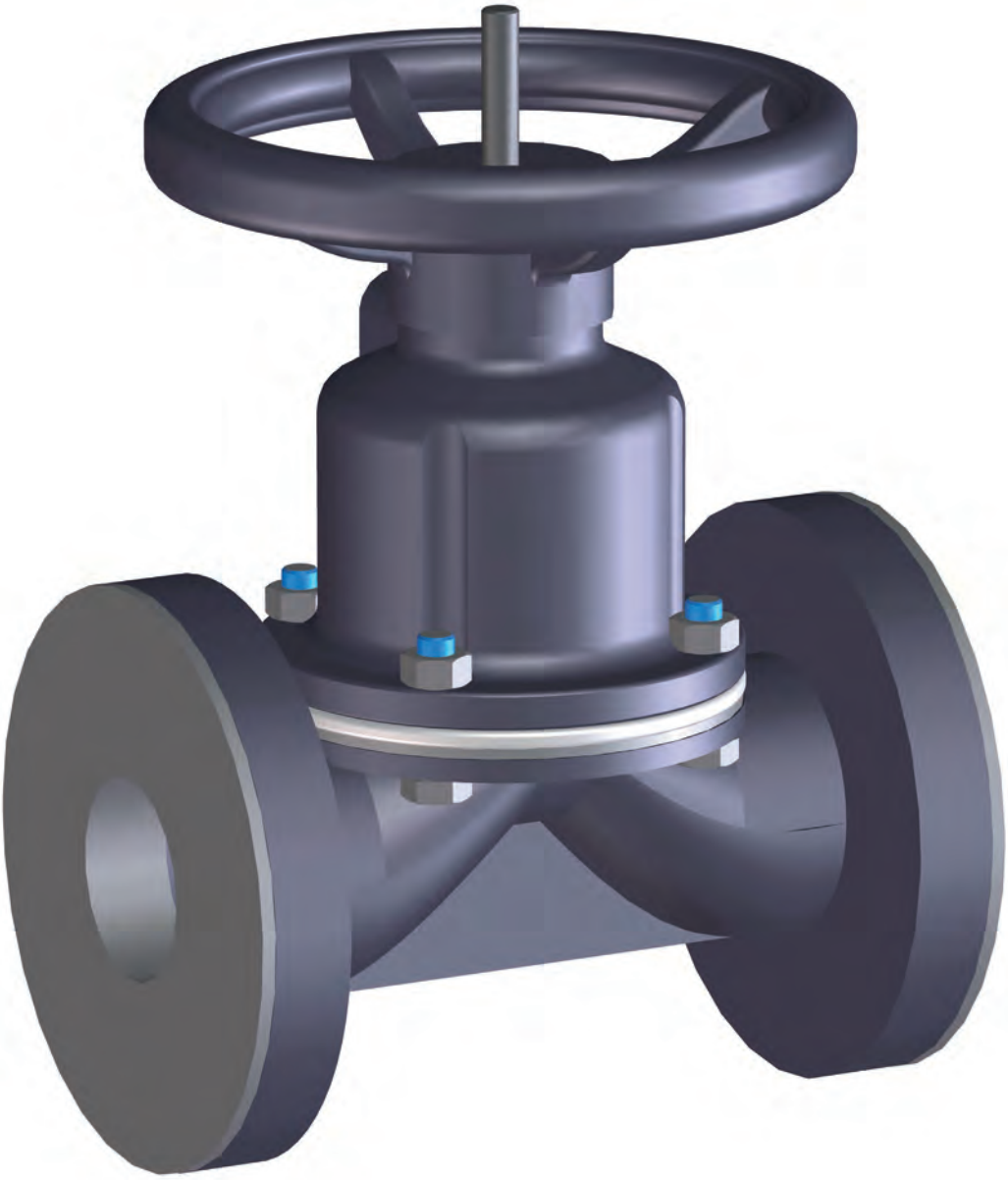

WEIGHT KG	
C.I unlined	C.I. ebonite lined
2,800	2,800
3,200	3,200
4,200	4,200
5,500	5,500
8,000	8,000
15,000	15,000
19,000	19,000
26,000	26,000
42,000	42,000
68,000	68,000
106,000	106,000
185,000	185,000
275,000	275,000
480,000	480,000
550,000	550,000

DIMENSIONS C.I. UNLINED			
Ø	A	B	D
15	130	92	95
20	150	100	105
25	160	114	115
30	180	115	140
40	200	153	150
50	230	160	165
60	290	180	185
75	310	233	200
100	350	256	230
125	400	306	254
150	480	368	285
200	600	479	343
250	730	585	406
300	850	689	485
350	980	830	533

DIMENSIONS C.I. EBONITE LINED			
Ø	A	B	D
15	130	92	95
20	150	100	105
25	160	114	115
30	180	115	140
40	200	153	150
50	230	160	165
60	290	180	185
75	310	233	200
100	350	256	230
125	400	306	254
150	480	368	285
200	600	479	343
250	730	585	406
300	850	689	485
350	980	830	533

Model GS51FB DIN REG

DIAPHRAGM VALVES

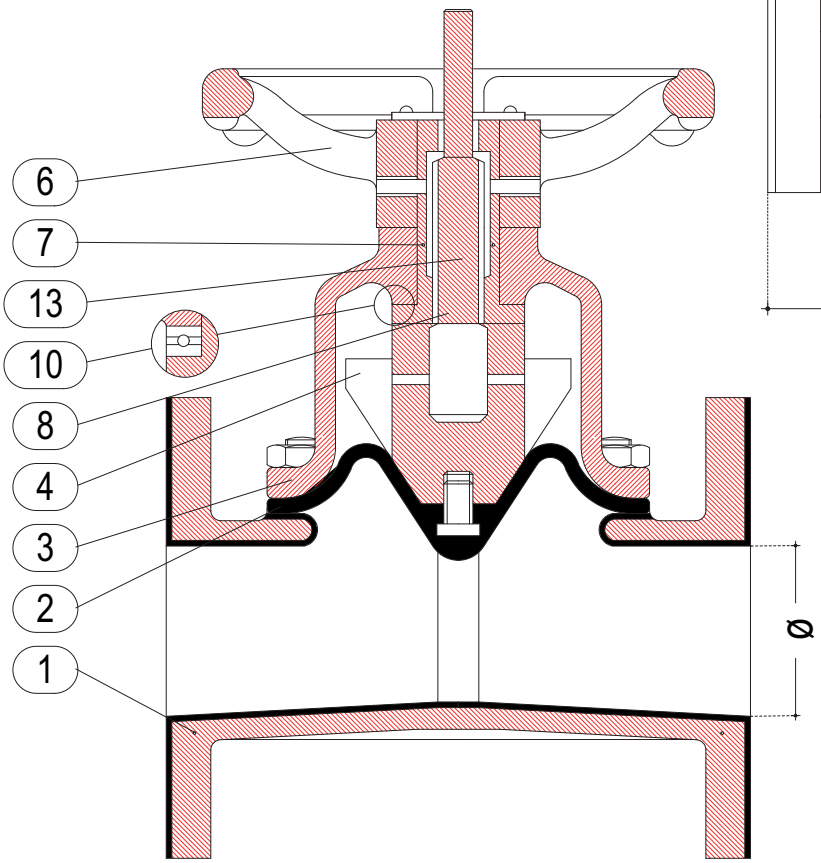

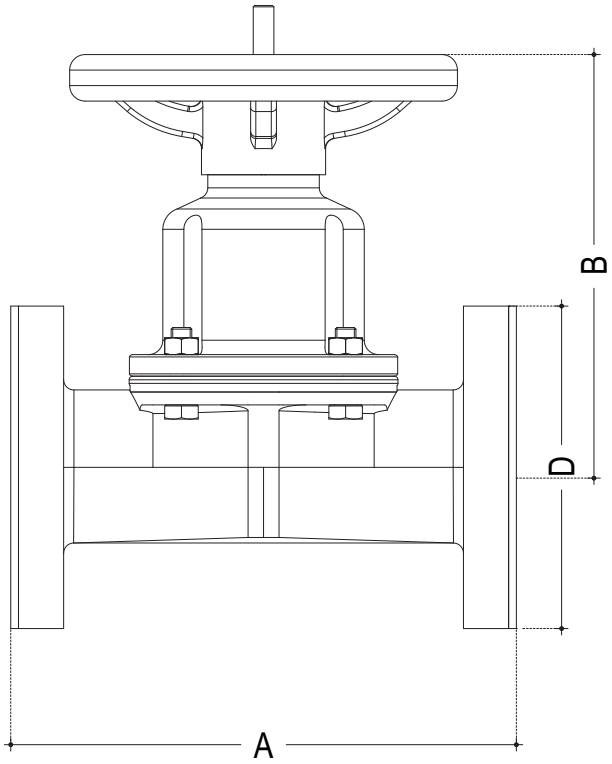

DETAILS	
1	BODY
2	DIAPHRAGM
3	BONNET
4	COMPRESSOR
6	HANDWHEEL
7	STEM BUSHING
8	STEM
10	THRUST BEARING
13	LUBRICATION FITTING

WEIGHT KG	
C.I unlined	C.I. ebonite lined
2,500	2,500
3,000	3,000
4,500	4,500
5,500	5,500
6,000	6,000
10,500	10,500
15,500	15,500
26,000	26,000
33,000	33,000
57,000	57,000
87,000	87,000
146,000	146,000
192,000	192,000
335,000	335,000

TEST PRESSURE IN BAR			
PRESSURE RATING	PN10	PN7	PN5
HYD SHELL	15	10,5	6
SEAT	10	7	5
AIR SEAT	5,0	5,0	5,0

* pressure rating: for size 15 to 100 mm 10 bar, for size 125 7 bar, for size 150mm to 300 mm 5 bar

DIMENSIONS C.I. UNLINED			
Ø	A	B	D
15	130	90	95
20	150	90	105
25	160	112	115
30	180	112	140
40	200	112	150
50	230	146	165
60	290	177	185
75	310	205	200
100	350	244	230
125	400	272	254
150	480	433	285
200	600	420	343
250	730	545	406
300	850	640	483

DIMENSIONS C.I. EBONITE LINED			
Ø	A	B	D
15	130	90	95
20	150	90	105
25	160	112	115
30	180	112	140
40	200	112	150
50	230	146	165
60	290	177	185
75	310	205	200
100	350	244	230
125	400	272	254
150	480	433	285
200	600	420	343
250	730	545	406
300	850	640	483

Model GS51SW REG

DIAPHRAGM VALVES

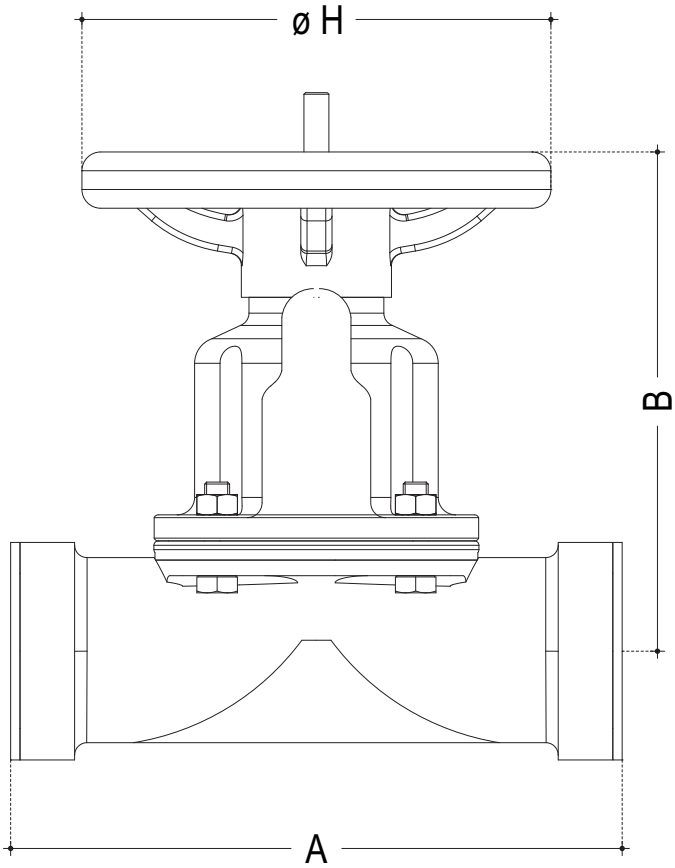

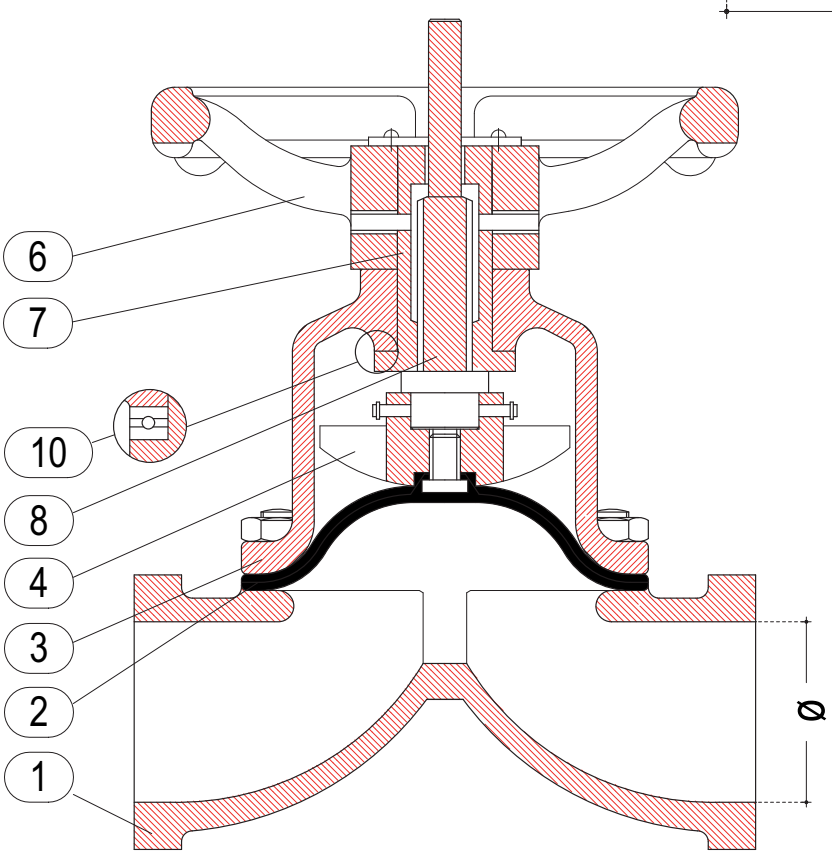

TEST PRESSURE IN BAR		
PRESSURE RATING	PN10	PN16
HYD SHELL	15	24
SEAT	10	16
AIR SEAT	5,0	5,0

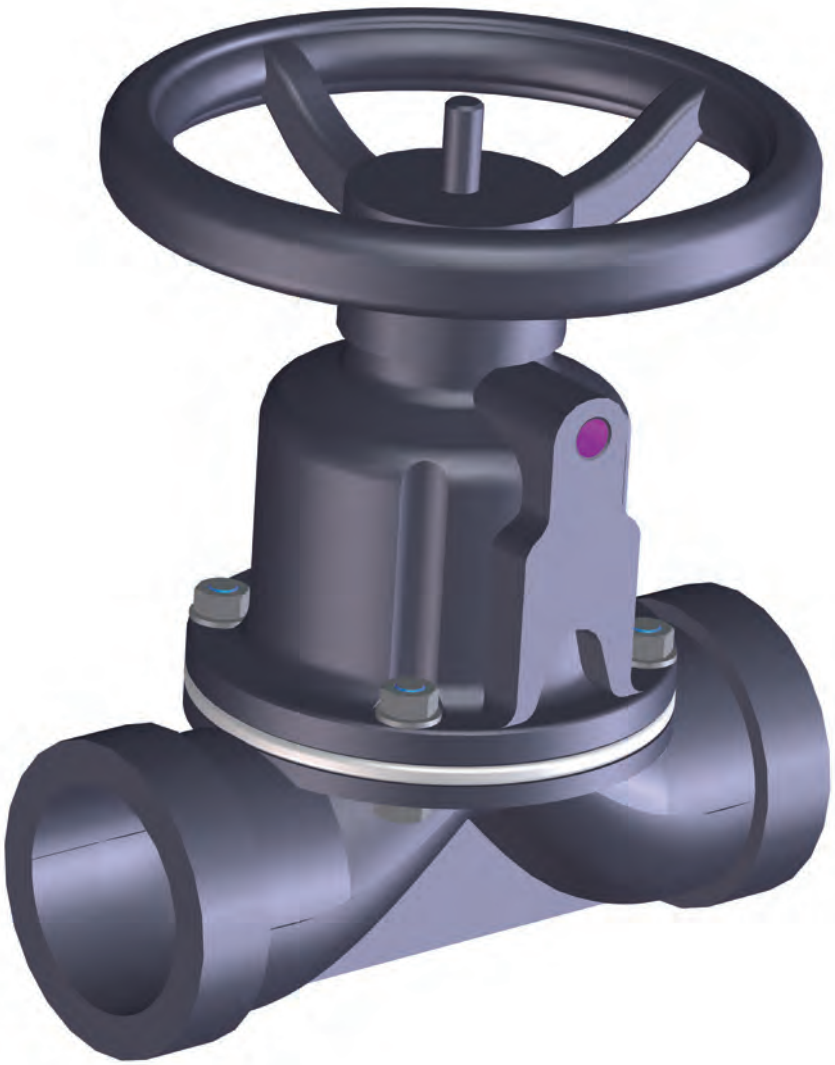

WEIGHT KG	
IRON	ALLOY
0,60	0,60
0,90	0,90
1,50	1,50
2,10	2,10
3,50	3,50
4,90	4,90
6,40	6,40
9,60	9,60
18,00	18,00
	26,00

DIMENSIONS IRON			
DN	A	B	Ø H
6	48	85	70
15	64	85	70
20	83	90	70
25	108	107	100
32	121	115	100
40	140	146	140
50	165	156	140
65	203	173	180
80	254	227	225

DIMENSIONS ALLOY			
Ø	A	B	D
6	108	85	70
15	108	85	70
20	117	90	70
25	127	107	100
32	146	115	100
40	159	146	140
50	190	156	140
65	216	173	180
80	254	227	225
100	305	255	225

Model GS52 HW

DIAPHRAGM VALVES

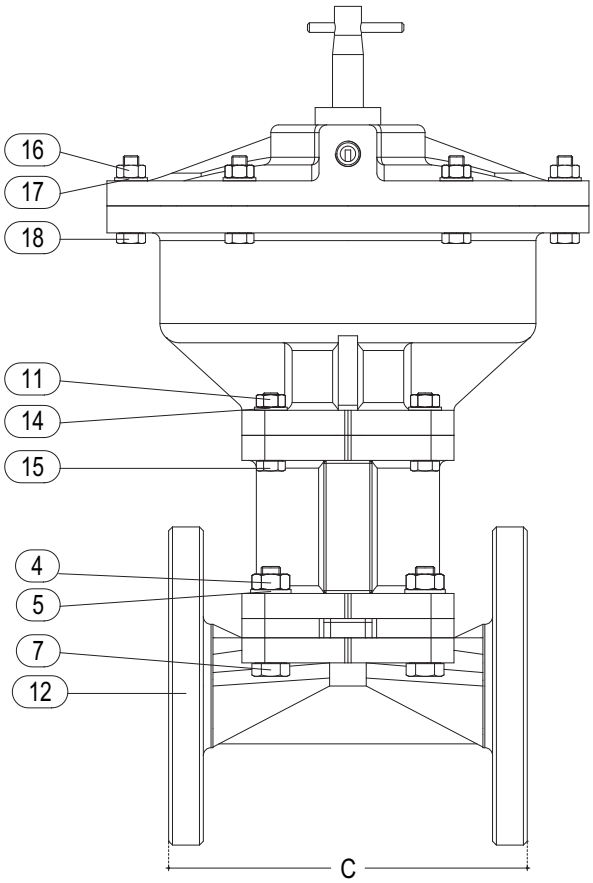

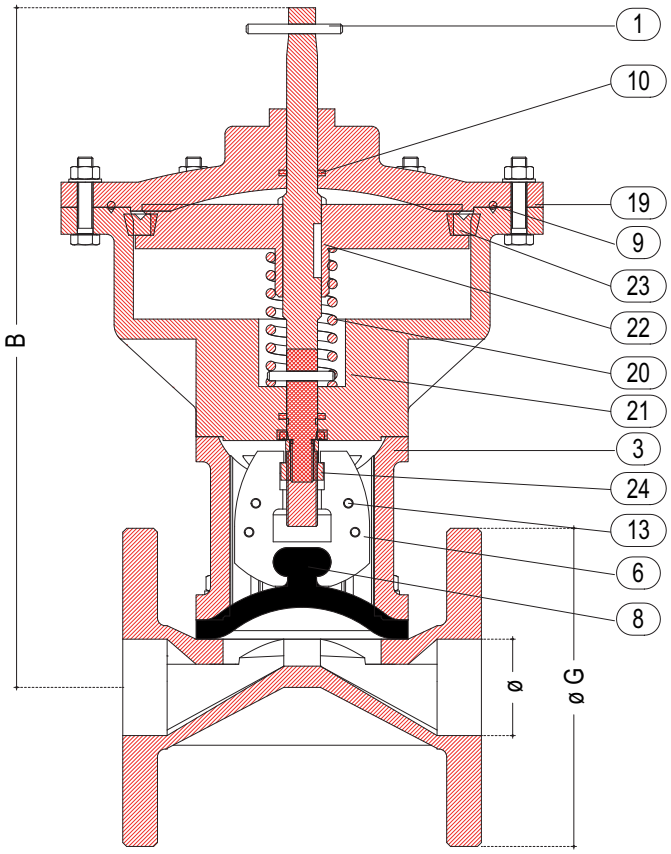

DETAILS	
1	SOCKET
3	SUPPORT
4	HEXAGON NUT
5	WASHER
6	PLUG
7	HEXAGON BOLT, STUD BOLT
8	DIAPHRAGM
9	GASKET
10	"V"GASKET
11	HEXAGON NUT
12	VALVE BODY
13	CLAMPING
14	WASHER
15	HEXAGON BOLT
16	HEXAGON NUT
17	WASHER
18	HEXAGON BOLT
19	COVER
20	SPRINGS
21	CYLINDER
22	PISTON,DRIVE PIN, GUIDE PIN
23	"V"GASKET
24	BRONZE NUT

PRESSURE DETAILS UNI_1284

DN	P.N.	HYDRAULIC TEST kg/cm² OPEN	HYDRAULIC TEST kg/cm² CLOSE	WORKING PRESSURE kg/cm²
20	5	15	5	4
25	5	15	5	4
30	5	15	5	4
40	5	15	5	4
50	4,5	15	4,5	3,5
60	4,5	15	4,5	3,5
75	4,5	15	4,5	3,5
100	4,5	15	4,5	3,5
125	4	13	4	3
150	4	13	4	3
200	3	13	3	2
250	3	13	3	2

NOTE: For different pressure details please ask the DPT

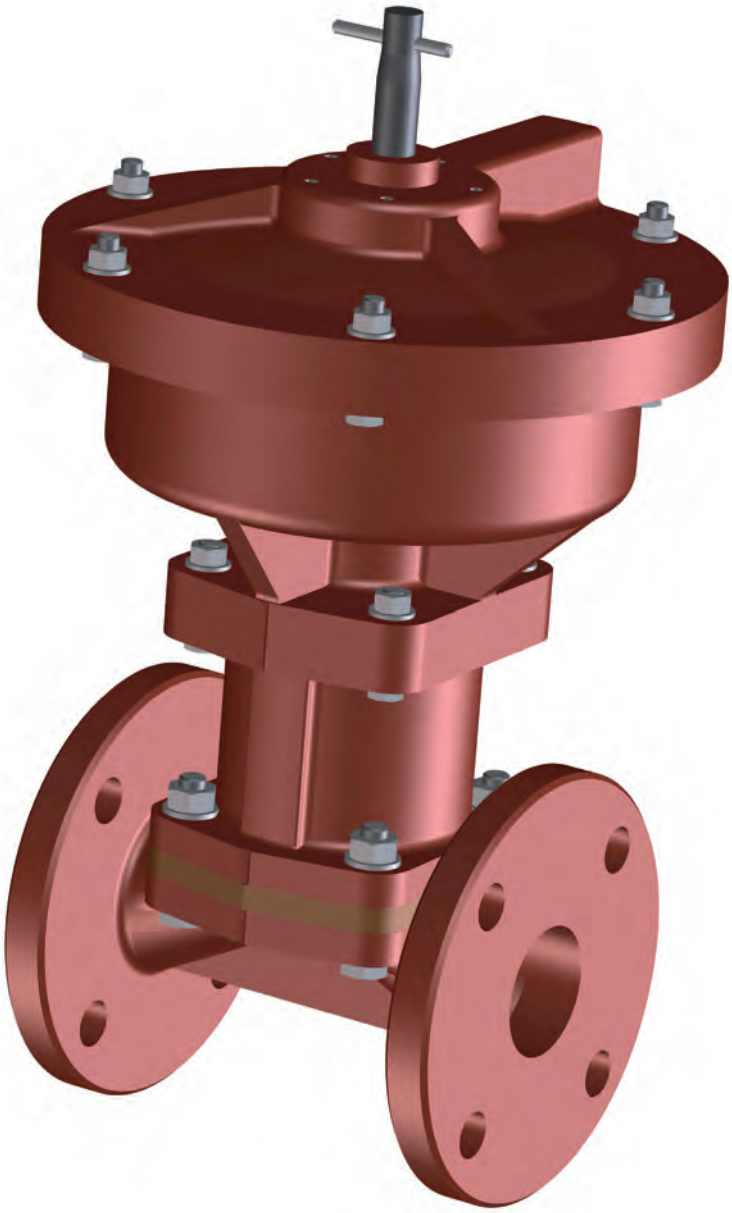

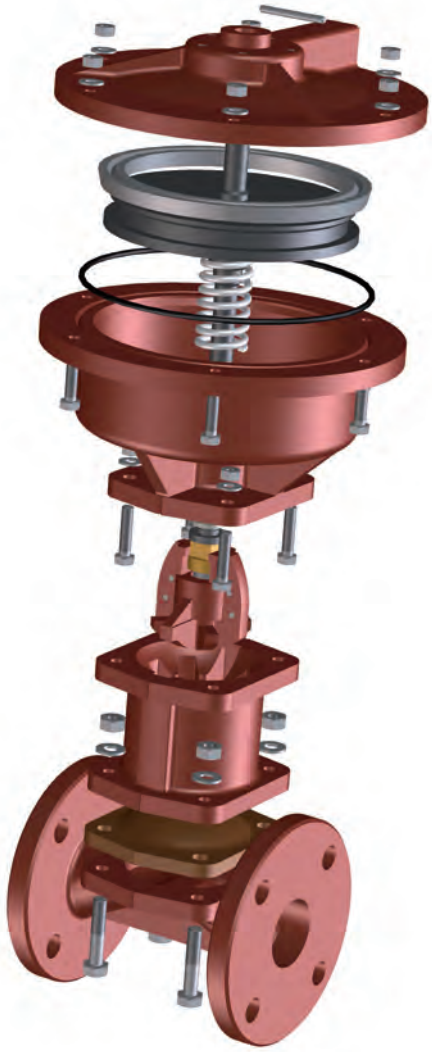

WEIGHT KG	
C.I unlined	C.I. ebonite lined
6,400	7,300
7,000	7,800
9,500	10,000
11,500	12,000
16,000	17,000
23,000	24,000
30,000	30,000
45,000	46,000
65,000	67,000
86,000	88,000
174,000	176,000
240,000	246,000

DIMENSIONS C.I. UNLINED				
Ø	B	C	G (UNI)	G (ASA)
20	230	117	105	98
25	230	127	115	108
30	280	146	140	118
40	330	159	150	127
50	350	190	165	152
60	410	217	185	178
75	450	254	200	190
100	540	305	220	229
125	665	356	250	254
150	710	406	285	280
200	950	520	340	343
250	1180	635	395	406

DIMENSIONS C.I. EBONITE LINED				
Ø	B	C	G (UNI)	G (ASA)
20	230	123	105	98
25	230	133	115	108
30	280	152	140	118
40	330	165	150	127
50	350	196	165	152
60	410	227	185	178
75	450	260	200	190
100	540	313	220	229
125	665	364	250	254
150	710	414	285	280
200	950	530	340	343
250	1180	645	395	406

Model GS52A HW

DIAPHRAGM VALVES

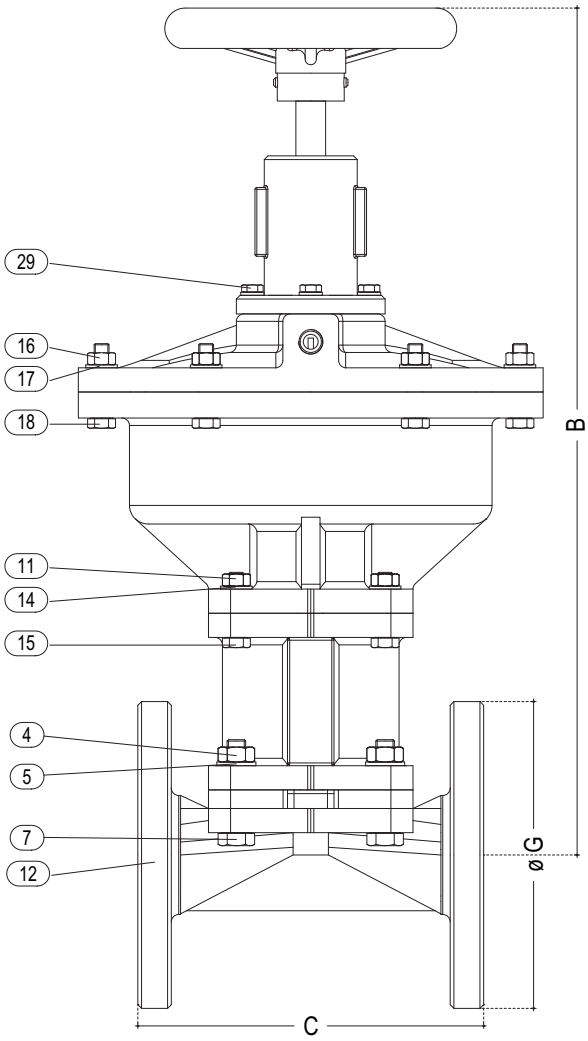

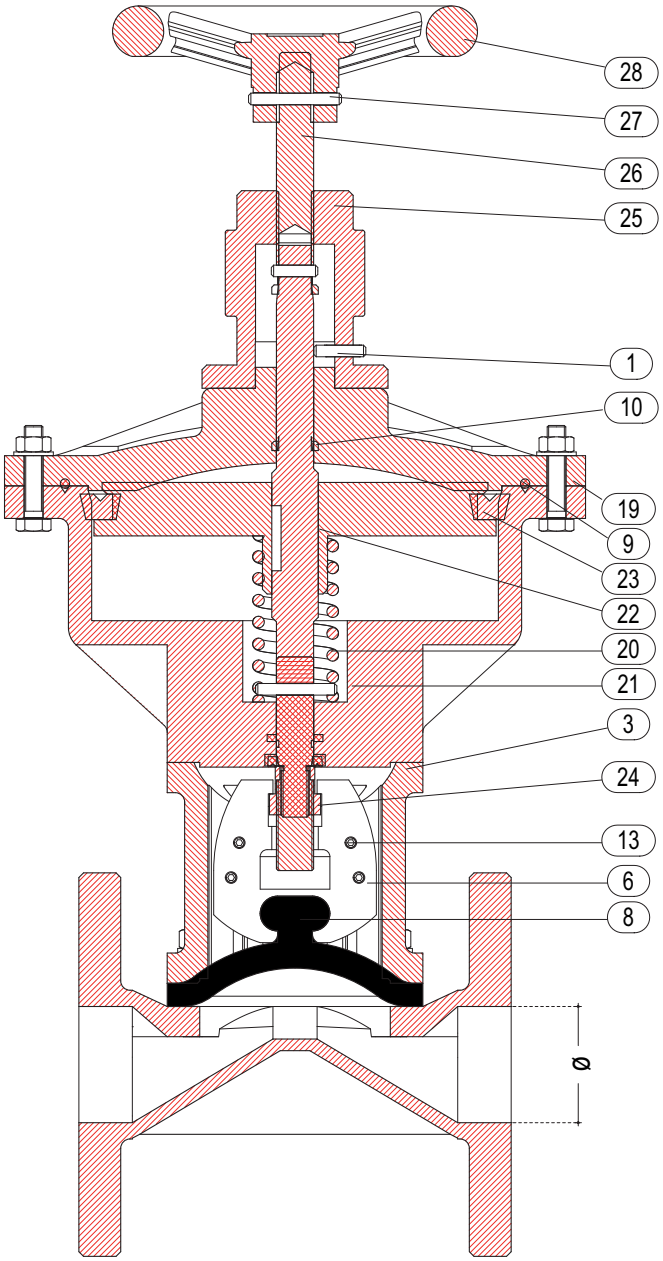

DETAILS	
1	SOCKET
3	SUPPORT
4	HEXAGON NUT
5	WASHER
6	PLUG
7	HEXAGON BOLT, STUD BOLT
8	DIAPHRAGM
9	GASKET
10	"V"GASKET
11	HEXAGON NUT
12	VALVE BODY
13	CLAMPING
14	WASHER
15	HEXAGON BOLT
16	HEXAGON NUT
17	WASHER
18	HEXAGON BOLT
19	COVER
20	SPRINGS
21	CYLINDER
22	PISTON,DRIVE PIN, GUIDE PIN
23	"V"GASKET
24	BRONZE NUT
25	UPPER COVER
26	LEAD SCREW
27	SOCKET
28	WHEEL
29	HEXAGON BOLT

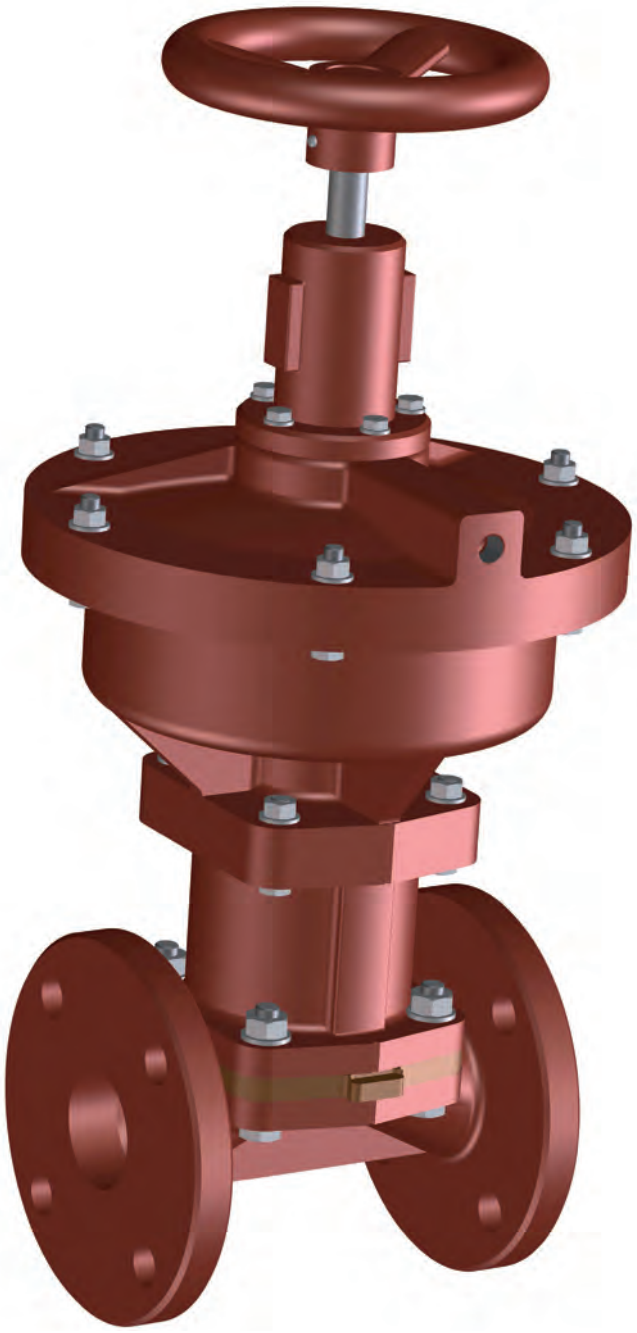

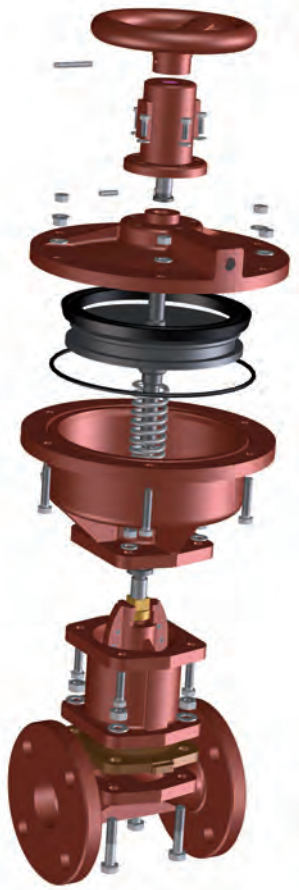

PRESSURE DETAILS UNI_1284

DN	P.N.	HYDRAULIC TEST kg/cm² OPEN	HYDRAULIC TEST kg/cm² CLOSE	WORKING PRESSURE kg/cm²
20	5	15	5	4
25	5	15	5	4
30	5	15	5	4
40	5	15	5	4
50	4,5	15	4,5	3,5
60	4,5	15	4,5	3,5
75	4,5	15	4,5	3,5
100	4,5	15	4,5	3,5
125	4	13	4	3
150	4	13	4	3
200	3	13	3	2
250	3	13	3	2

NOTE: For different pressure details please ask the DPT

AIR PRESSURE REQUIRED KG/CM²

dn	20	25	30	40	50	60	75	100	125	150	200	250
min.	2	2	2	2	2	3	3	3	3,5	3	2,5	2,5
max.	5	5	5	5	5	5	5	5	5	4	4	4

WEIGHT KG

C.I unlined	C.I. ebonite lined
7,600	7,800
7,800	8,000
12,000	11,800
14,000	14,400
19,700	20,000
26,000	27,000
35,000	35,500
54,000	55,000
76,500	77,500
98,000	99,000
180,000	182,000
280,000	288,000

DIMENSIONS C.I. UNLINED

Ø	B	C	G (UNI)	G (ASA)
20	311,5	117	105	98
25	311,5	127	115	108
30	366	146	140	118
40	430	159	150	127
50	454	190	165	152
60	537	217	185	178
75	591	254	200	190
100	703	305	220	229
125	872	356	250	254
150	932	406	285	280
200	1255	520	340	343
250	1503	635	395	406

DIMENSIONS C.I. EBONITE LINED

Ø	B	C	G (UNI)	G (ASA)
20	311,5	123	105	98
25	311,5	133	115	108
30	366	152	140	118
40	430	165	150	127
50	454	196	165	152
60	537	227	185	178
75	591	260	200	190
100	703	313	220	229
125	872	364	250	254
150	932	414	285	280
200	1255	530	340	343
250	1503	645	395	406

Model GS52A REG

DIAPHRAGM VALVES

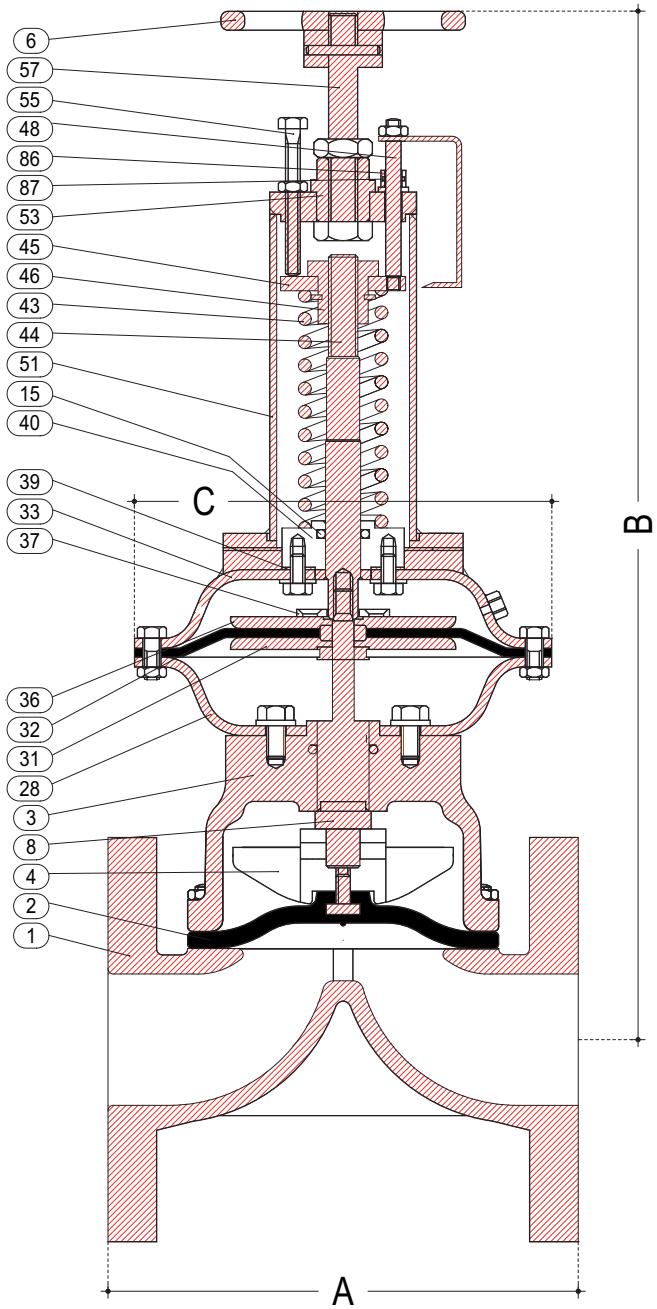

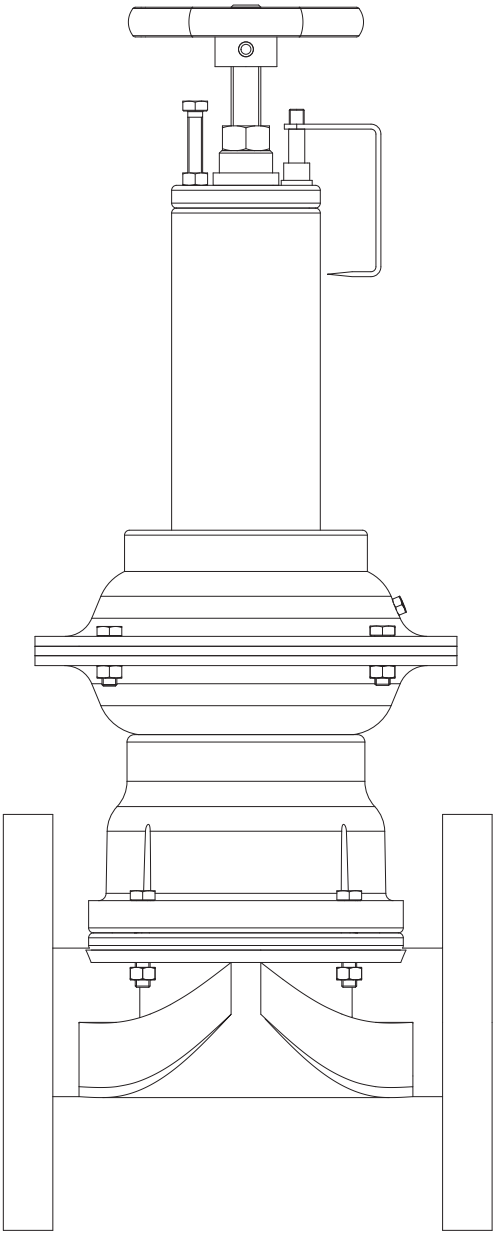

DETAILS

1	BODY
2	DIAPHRAGM
3	BONNET
4	COMPRESSOR
6	HANDWHEEL
8	STEM
15	O RING
28	BOTTOM CHAMBER
31	BOTTOM SUPPORT PLATE
32	AIR DIAPHRAGM
33	TOP CHAMBER
36	TOP SUPPORT PLATE
37	LOCKING WASHER
39	GASKET
40	SPRING SEAT
43	SPRING
44	STEM EXTENSION
45	SPRING PLATE
46	BUSH
48	PSITION INDICATOR
51	SPRING CHAMBER
53	SLEEVE
55	LIMIT OPENING BOLT OR SCREW
57	SPINDLE
86	INDICATOR BUSH
87	O RING

PRESSURE RATING

refer technical data

Unlined

dn		15	20	25	40	50	65	80	100	125	150	200	250
Act Model	C	←					B						→
BA11	170	360	365	375	400	415							
BA21	255			465	490	505	550	570	600	765			
BA31	338			490	510	525	610	635	650	820	865	980	
BA61	415						735	755	775	840	935	1095	
BA71	462							770	790	900	950	1110	1145
BA81	570								825	1075	1085	1155	1195
		←					A						→
		108	117	127	159	190	216	254	305	356	406	521	635

Lined

dn		15	20	25	40	50	65	80	100	125	150	200	250
Act Model	C	←					B						→
BA11	170	360	365	375	400	415							
BA21	255			465	490	505	550	570	600	765			
BA31	338			490	510	525	610	635	650	820	865	980	
BA61	415						735	755	775	840	935	1095	
BA71	462							770	790	900	950	1110	1145
BA81	570								825	1075	1085	1155	1195
		←					A						→
		114	123	133	165	196	222	260	313	364	414	529	645

Model GS52A DIN REG

DIAPHRAGM VALVES

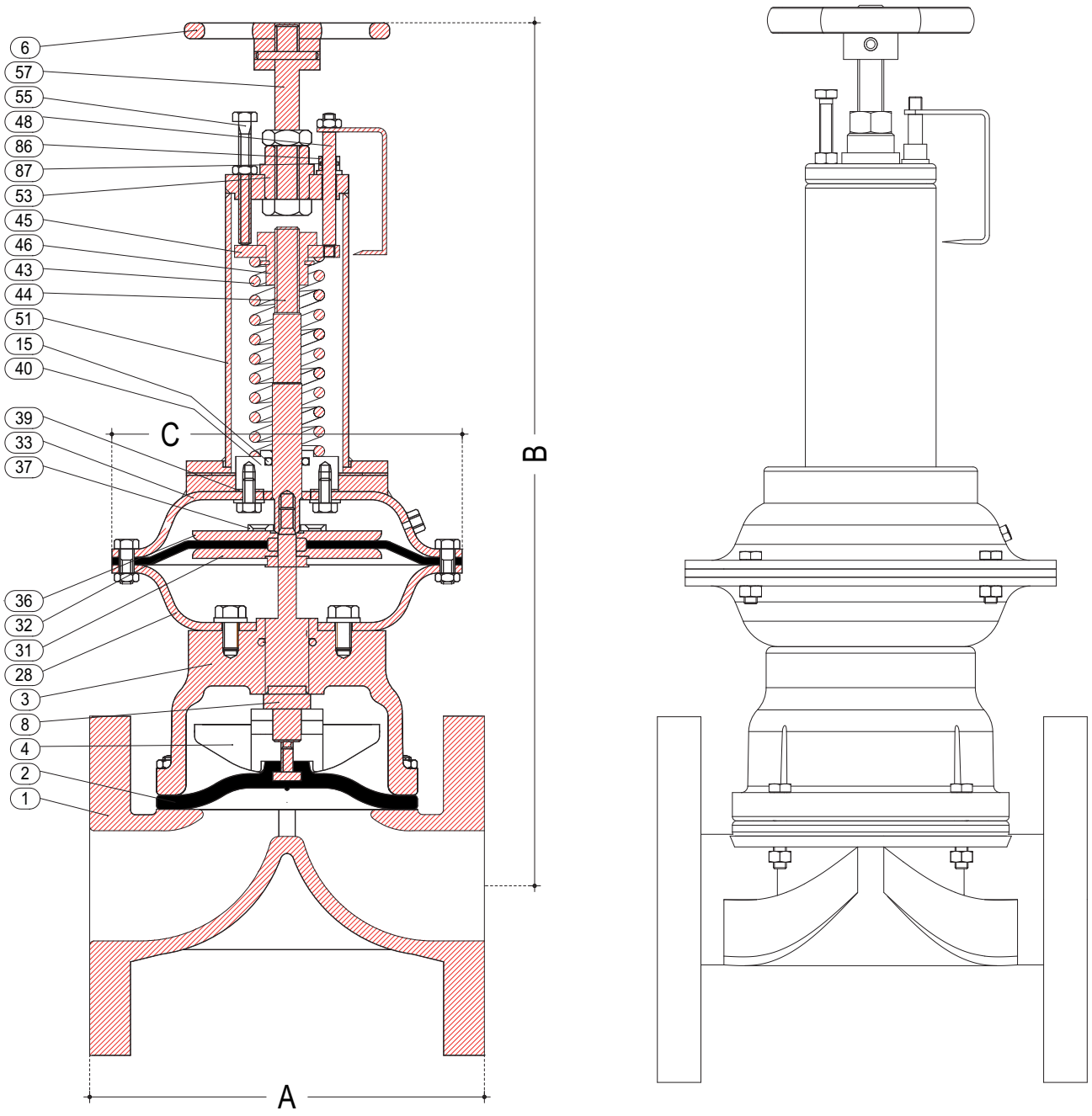

DETAILS

1	BODY
2	DIAPHRAGM
3	BONNET
4	COMPRESSOR
6	HANDWHEEL
8	STEM
15	O RING
28	BOTTOM CHAMBER
31	BOTTOM SUPPORT PLATE
32	AIR DIAPHRAGM
33	TOP CHAMBER
36	TOP SUPPORT PLATE
37	LOCKING WASHER
39	GASKET
40	SPRING SEAT
43	SPRING
44	STEM EXTENSION
45	SPRING PLATE
46	BUSH
48	PSITION INDICATOR
51	SPRING CHAMBER
53	SLEEVE
55	LIMIT OPENING BOLT OR SCREW
57	SPINDLE
86	INDICATOR BUSH
87	O RING

PRESSURE RATING

refer technical data

Unlined/Lined

dn		15	20	25	40	50	65	80	100	125	150	200	250
Act Model	C	←					B						→
BA11	170	360	365	375	400	415							
BA21	255			465	490	505	550	570	600	765			
BA31	338			490	510	525	610	635	650	820	865	980	
BA61	415						735	755	775	840	935	1095	
BA71	462							770	790	900	950	1110	1145
BA81	570								825	1075	1085	1155	1195
		←					A						→
		130	150	160	200	230	290	310	350	400	480	600	730

Model GS52A FB REG

DIAPHRAGM VALVES

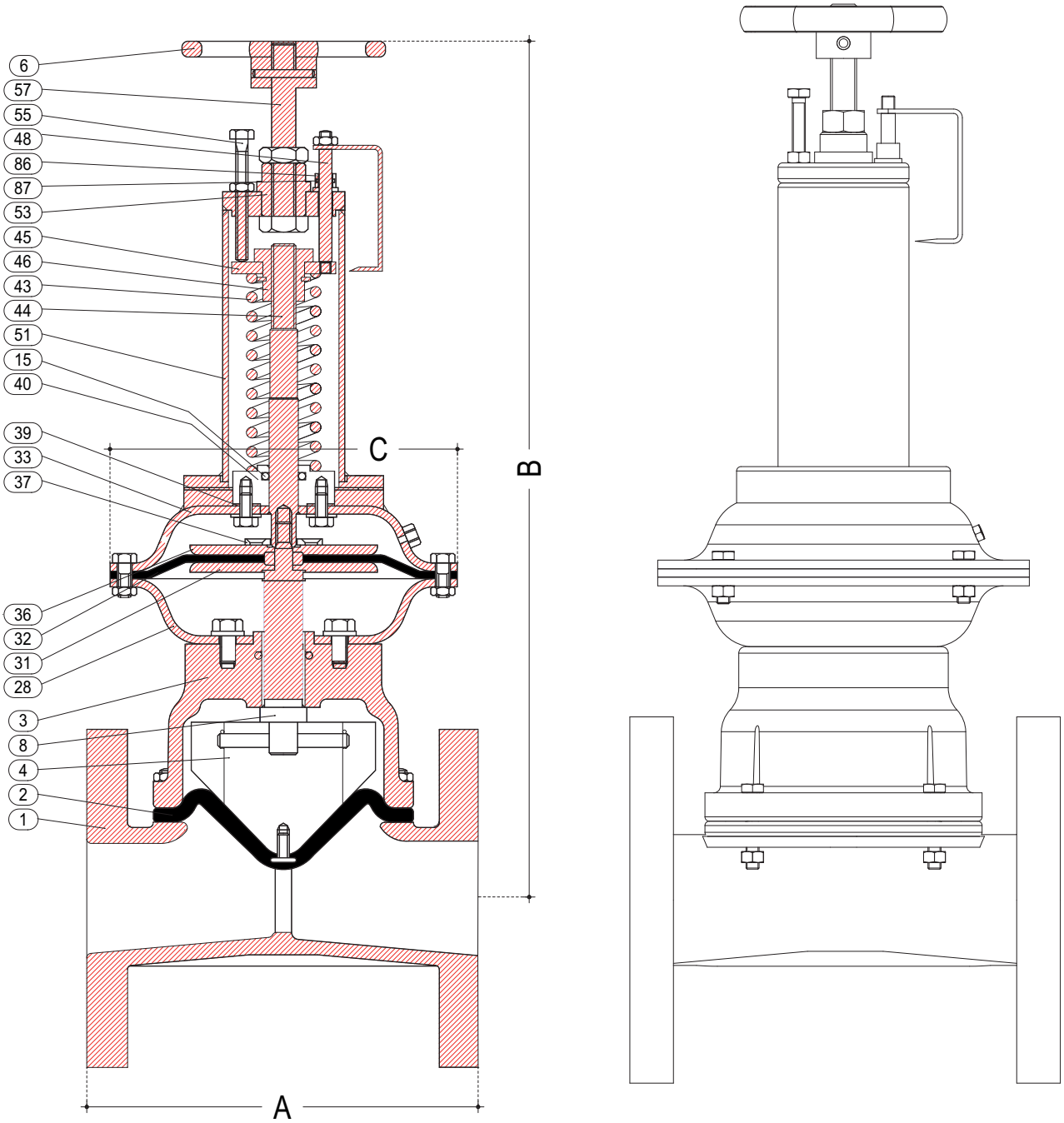

DETAILS

1	BODY
2	DIAPHRAGM
3	BONNET
4	COMPRESSOR
6	HANDWHEEL
8	STEM
15	O RING
28	BOTTOM CHAMBER
31	BOTTOM SUPPORT PLATE
32	AIR DIAPHRAGM
33	TOP CHAMBER
36	TOP SUPPORT PLATE
37	LOCKING WASHER
39	GASKET
40	SPRING SEAT
43	SPRING
44	STEM EXTENSION
45	SPRING PLATE
46	BUSH
48	PSITION INDICATOR
51	SPRING CHAMBER
53	SLEEVE
55	LIMIT OPENING BOLT OR SCREW
57	SPINDLE
86	INDICATOR BUSH
87	O RING

PRESSURE RATING

refer technical data

Unlined

dn		15	20	25	40	50	65	80	100	125	150	200	250
Act Model	C	←					B						→
BA11	170	355	360	375	375								
BA21	255			465	465	495	530	545					
BA31	338			490	490	520	595	605	640				
BA61	415						715	730	760	930	940		
BA71	462							745	775	950	960	1025	
BA81	570								825	1075	1085	1155	
		←					A						→
		108	117	127	159	190	216	254	305	356	406	521	

Lined

dn		15	20	25	40	50	65	80	100	125	150	200	250
Act Model	C	←					B						→
BA11	170	355	360	375	375								
BA21	255			465	465	495	530	545					
BA31	338			490	490	520	595	605	640				
BA61	415						715	730	760	930	940		
BA71	462							745	775	950	960	1025	
BA81	570								825	1075	1085	1155	
		←					A						→
		114	123	133	165	196	222	260	313	364	414	529	

Model GS52A FB DIN REG

DIAPHRAGM VALVES

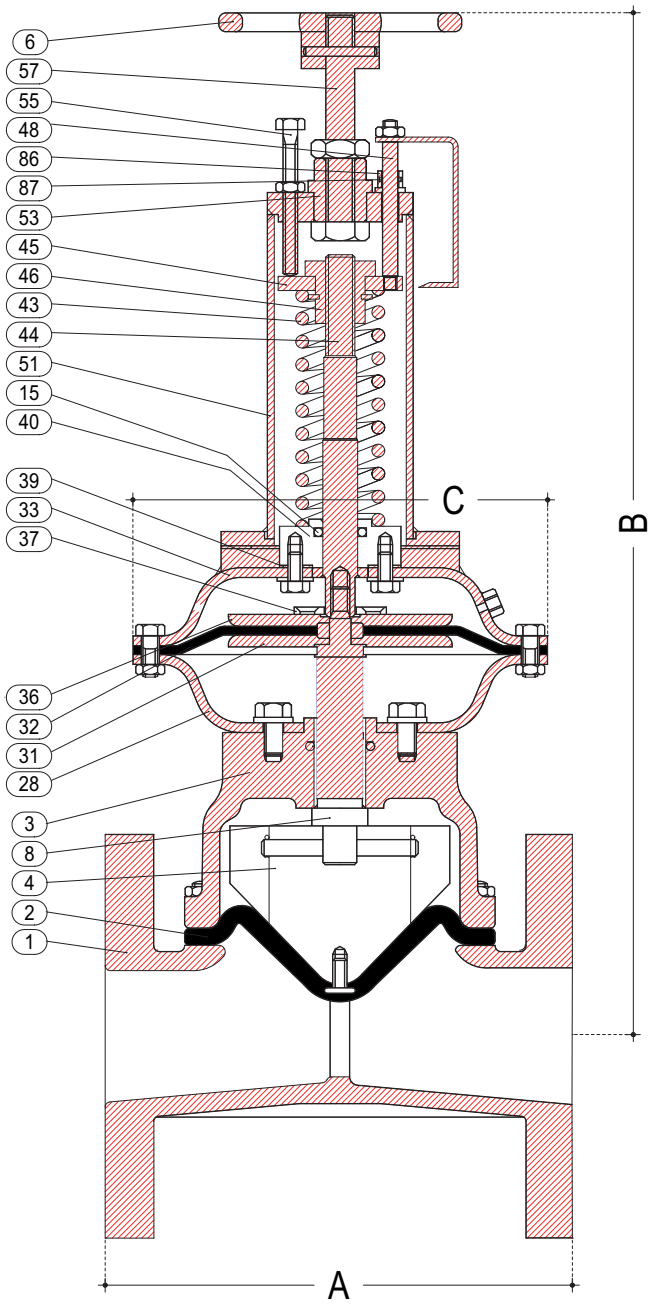

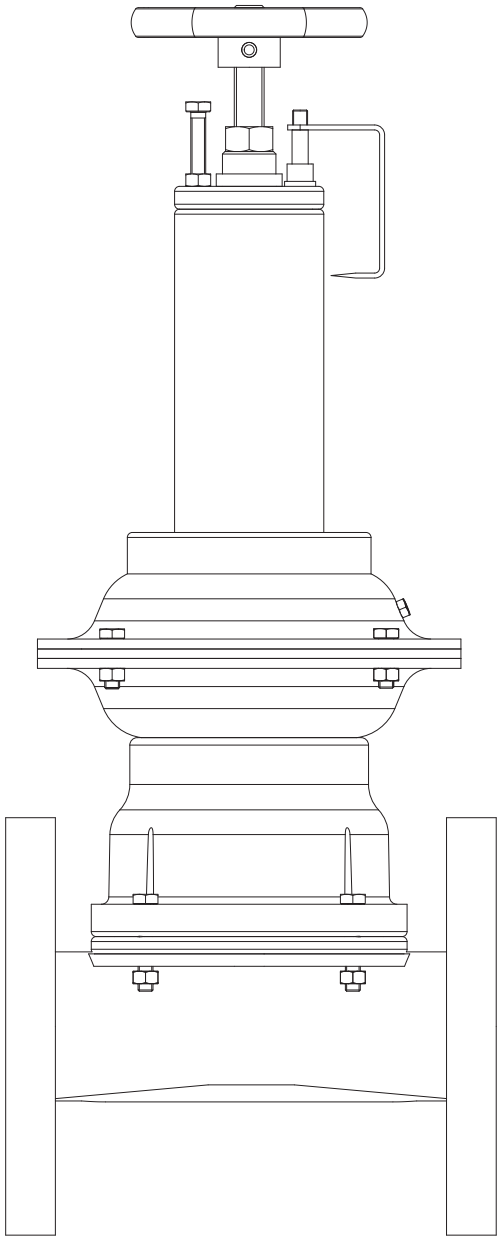

DETAILS

1	BODY
2	DIAPHRAGM
3	BONNET
4	COMPRESSOR
6	HANDWHEEL
8	STEM
15	O RING
28	BOTTOM CHAMBER
31	BOTTOM SUPPORT PLATE
32	AIR DIAPHRAGM
33	TOP CHAMBER
36	TOP SUPPORT PLATE
37	LOCKING WASHER
39	GASKET
40	SPRING SEAT
43	SPRING
44	STEM EXTENSION
45	SPRING PLATE
46	BUSH
48	PSITION INDICATOR
51	SPRING CHAMBER
53	SLEEVE
55	LIMIT OPENING BOLT OR SCREW
57	SPINDLE
86	INDICATOR BUSH
87	O RING

PRESSURE RATING

refer technical data

Unlined/Lined

dn		15	20	25	40	50	65	80	100	125	150	200	250
Act Model	C	←					B						→
BA11	170	355	360	375	375								
BA21	255			465	465	495	530	545					
BA31	338			490	490	520	595	605	640				
BA61	415						715	730	760	930	940		
BA71	462							745	775	950	960	1025	
BA81	570								825	1075	1085	1155	
		←					A						→
		130	150	160	200	230	290	310	350	400	480	600	

Model GS53 HW

DIAPHRAGM VALVES

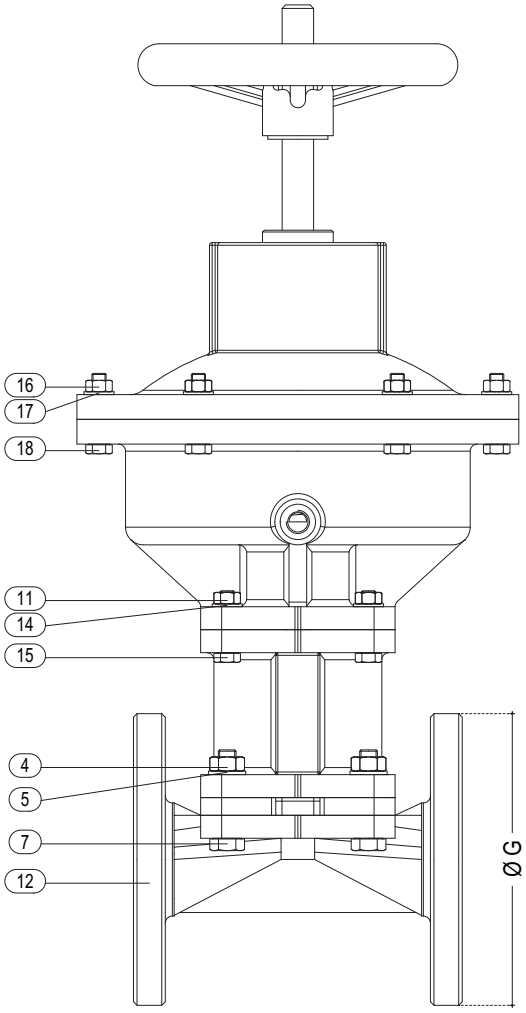

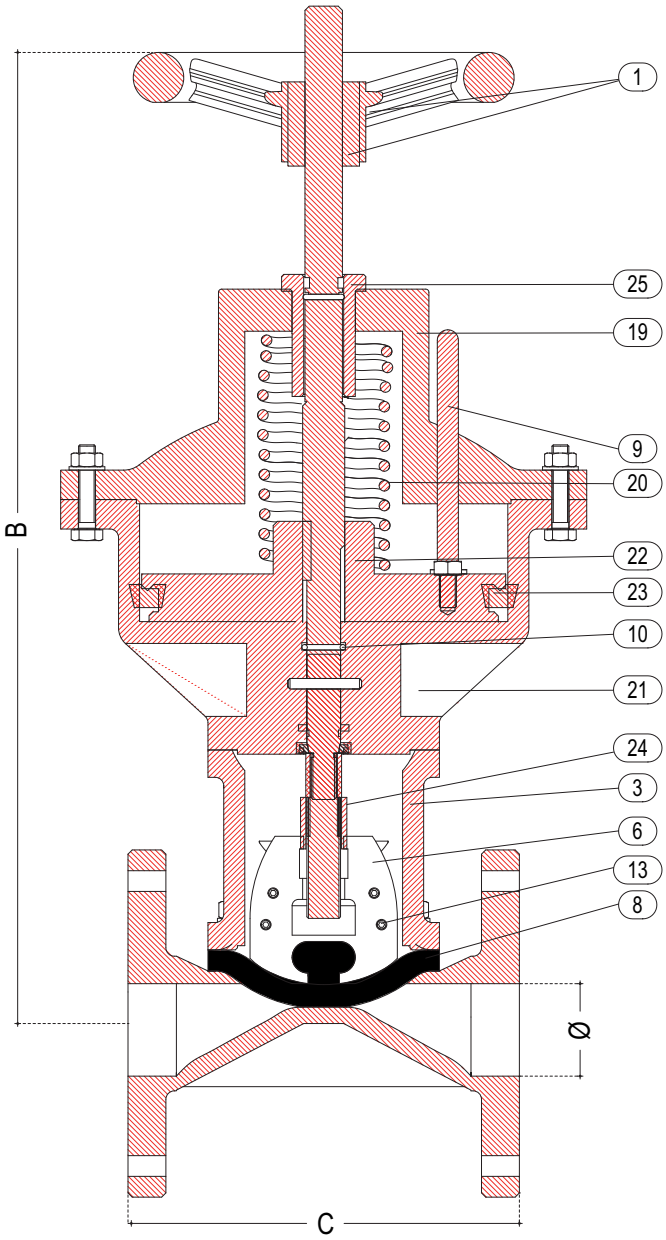

DETAILS	
1	WHEEL AND BUSHING
2	
3	SUPPORT
4	HEXAGON NUT
5	WASHER
6	PLUG
7	HEXAGON BOLT
8	DIAPHRAGM
9	GUIDE PIN
10	"V"GASKET
11	HEXAGON NUT
12	VALVE BODY
13	CLAMPING
14	WASHER
15	HEXAGON BOLT
16	HEXAGON NUT
17	WASHER
18	HEXAGON BOLT
19	COVER
20	SPRINGS
21	CYLINDER
22	PISTON,PIN AND LEAD SCREW
23	"V"GASKET
24	BRONZE NUT
25	WHEEL BUSHING

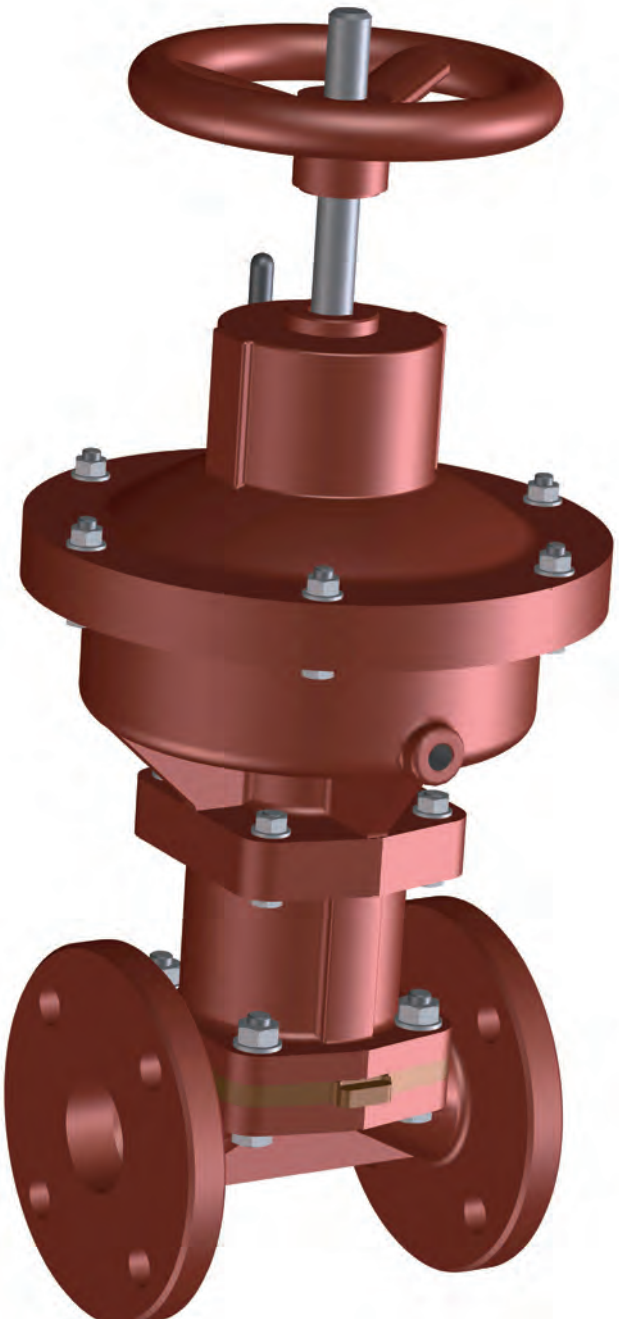

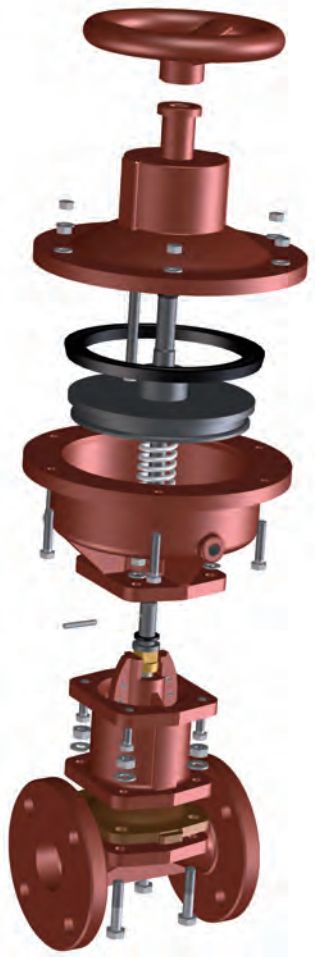

PRESSURE DETAILS UNI_1284

DN	P.N.	HYDRAULIC TEST kg/cm² OPEN	HYDRAULIC TEST kg/cm² CLOSE	WORKING PRESSURE kg/cm²
20	4,5	15	4,5	4
25	4,5	15	4,5	4
30	4,5	15	4,5	4
40	4,5	15	4,5	4
50	4	15	4	3
60	4	15	4	3
75	4	15	4	3
100	3,5	15	3,5	2,5
125	3,5	13	3,5	2,5
150	3	13	3	2
200	2,5	13	2,5	1,5

NOTE: For different pressure details please ask the DPT

AIR PRESSURE REQUIRED KG/CM²

dn	20	25	30	40	50	60	75	100	125	150	200
min.	4	4	4	4	4	4	3,5	3,5	3	3	2,5
max.	6	6	6	6	6	6	5	5	5	4	4

WEIGHT KG

C.I unlined	C.I. ebonite lined
7,800	8,000
8,500	8,500
12,400	12,500
14,000	14,500
19,500	20,500
26,000	27,000
34,000	35,000
54,500	55,500
76,000	77,000
94,000	96,000
185,000	187,000

DIMENSIONS C.I. UNLINED

Ø	B	C	G (UNI)	G (ASA)
20	330	117	105	98
25	330	127	115	108
30	380	146	140	118
40	450	159	150	127
50	470	190	165	152
60	500	217	185	178
75	600	254	200	190
100	710	305	220	229
125	800	356	250	254
150	870	406	285	280
200	1130	520	340	343

DIMENSIONS C.I. EBONITE LINED

Ø	B	C	G (UNI)	G (ASA)
20	330	123	105	98
25	330	133	115	108
30	380	152	140	118
40	450	165	150	127
50	470	196	165	152
60	500	227	185	178
75	600	260	200	190
100	710	313	220	229
125	800	364	250	254
150	870	414	285	280
200	1130	530	340	343

Model GS54 HW

DIAPHRAGM VALVES

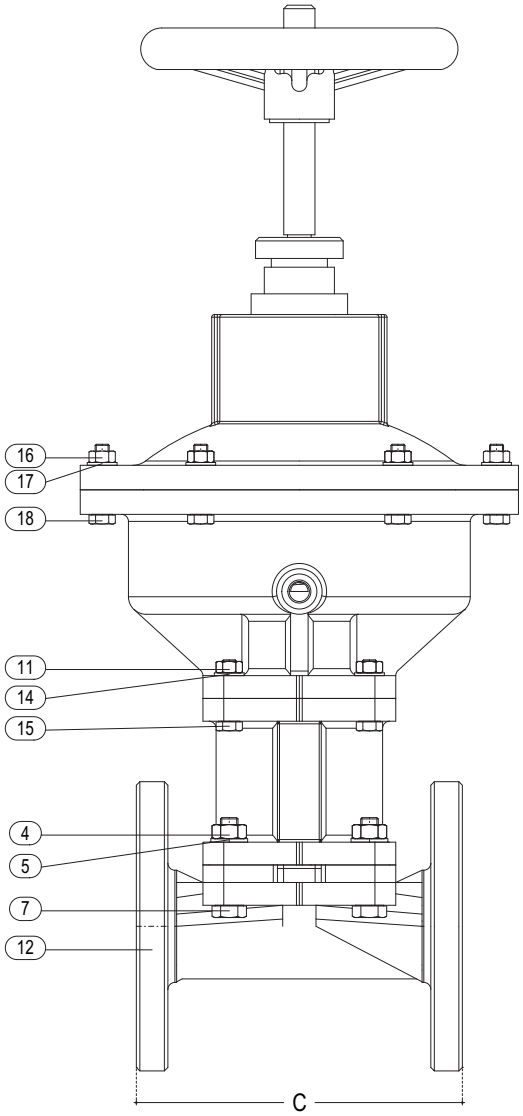

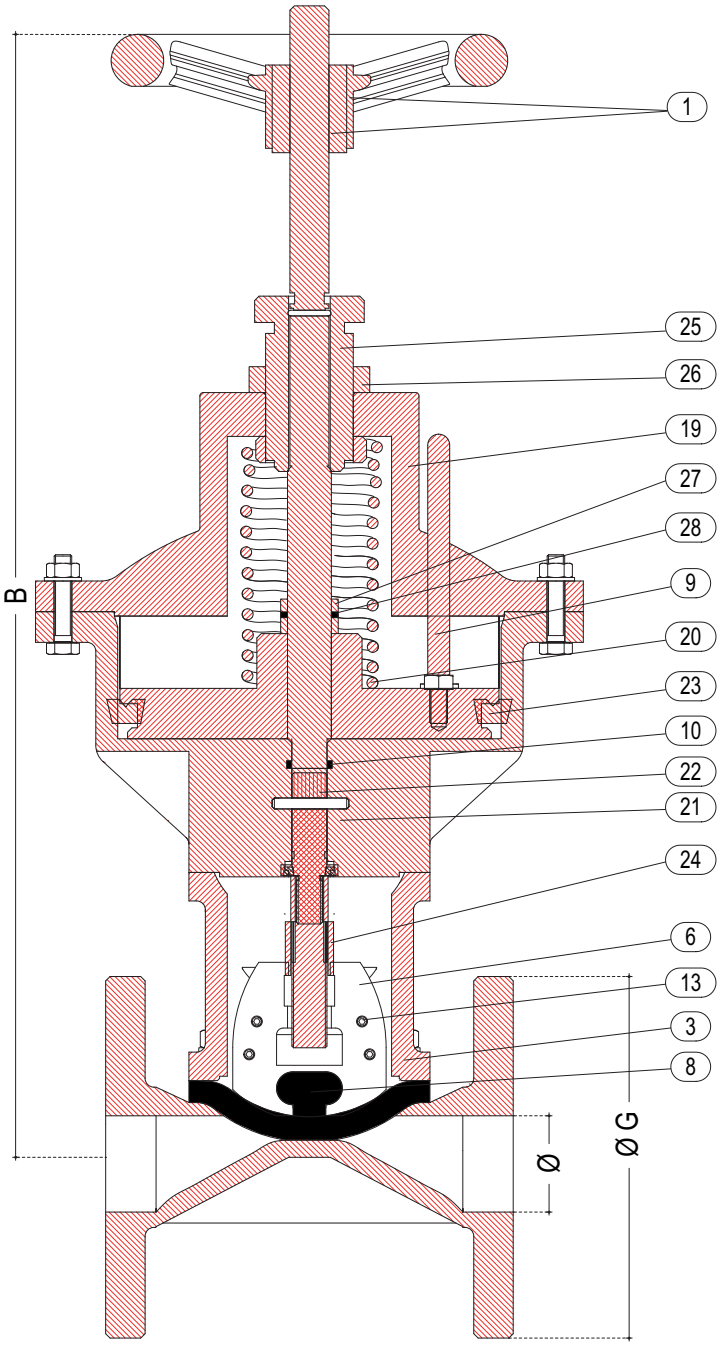

DETAILS	
1	WHEEL AND BUSHING
3	SUPPORT
4	HEXAGON NUT
5	WASHER
6	PLUG
7	HEXAGON BOLT
8	DIAPHRAGM
9	GUIDE PIN
10	"V"GASKET
11	HEXAGON NUT
12	VALVE BODY
13	CLAMPING
14	WASHER
15	HEXAGON BOLT
16	HEXAGON NUT
17	WASHER
18	HEXAGON BOLT
19	COVER
20	SPRINGS
21	CYLINDER
22	PISTON,PIN AND LEAD SCREW
23	"V"GASKET
24	HEXAGON NUT
25	REGOLATOR WHEEL
26	BUSHING
27	WHEEL
28	WITH

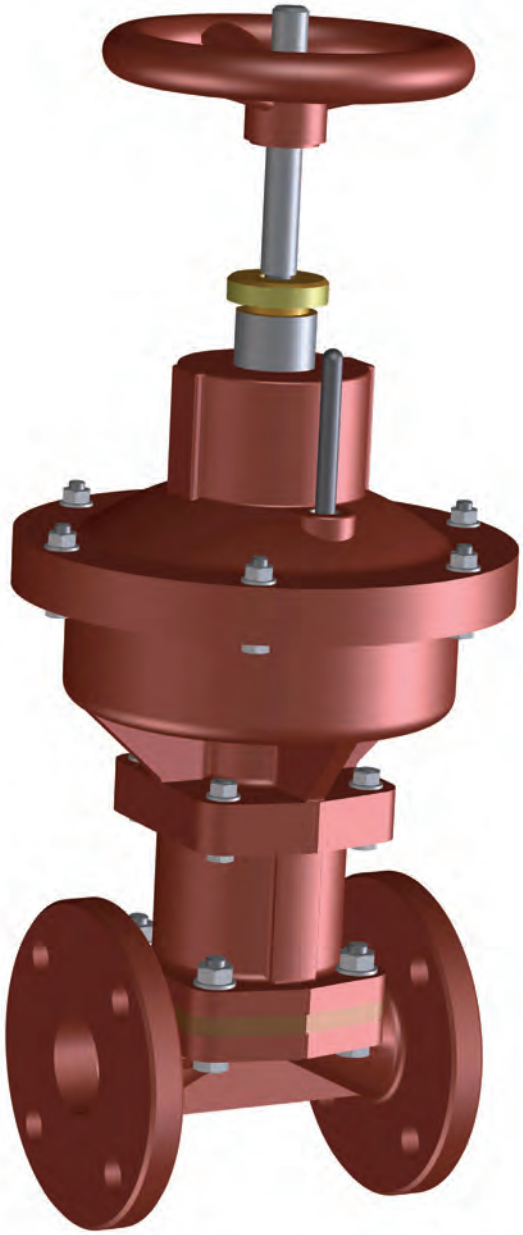

PRESSURE DETAILS UNI_1284

DN	P.N.	HYDRAULIC TEST kg/cm² OPEN	HYDRAULIC TEST kg/cm² CLOSE	WORKING PRESSURE kg/cm²
20	4,5	15	4,5	4
25	4,5	15	4,5	4
30	4,5	15	4,5	4
40	4,5	15	4,5	4
50	4	15	4,5	3
60	4	15	4,5	3
75	4	15	4,5	3
100	3,5	15	3,5	2,5
125	3,5	13	3,5	2,5
150	3	13	3	2
200	2,5	13	2,5	1,5

NOTE: For different pressure details please ask the DPT

AIR PRESSURE REQUIRED KG/CM²

dn	20	25	30	40	50	60	75	100	125	150	200
min.	4	4	4	4	4	4	3,5	3,5	3	3	2,5
max.	6	6	6	6	6	6	5	5	5	4	4

WEIGHT KG

C.I unlined	C.I. ebonite lined
8,400	8,500
8,700	8,800
12,700	12,800
14,300	14,800
20,000	21,000
26,600	27,600
34,800	35,800
55,500	58,500
77,000	78,000
95,300	97,300
187,000	189,000

DIMENSIONS C.I. UNLINED

Ø	B	C	G (UNI)	G (ASA)
20	360	117	105	98
25	360	127	115	108
30	410	146	140	118
40	450	159	150	127
50	520	190	165	152
60	590	217	185	178
75	620	254	200	190
100	780	305	220	229
125	960	356	250	254
150	990	406	285	280
200	1300	520	340	343

DIMENSIONS C.I. EBONITE LINED

Ø	B	C	G (UNI)	G (ASA)
20	360	123	105	98
25	360	133	115	108
30	410	152	140	118
40	450	165	150	127
50	520	196	165	152
60	590	227	185	178
75	620	260	200	190
100	780	313	220	229
125	960	364	250	254
150	990	414	285	280
200	1300	530	340	343

Model GS54 REG

DIAPHRAGM VALVES

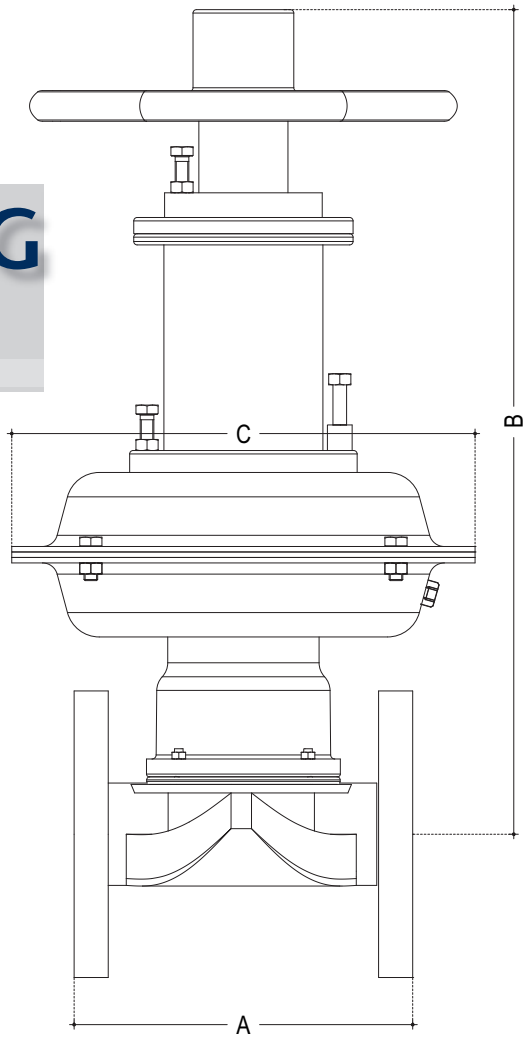

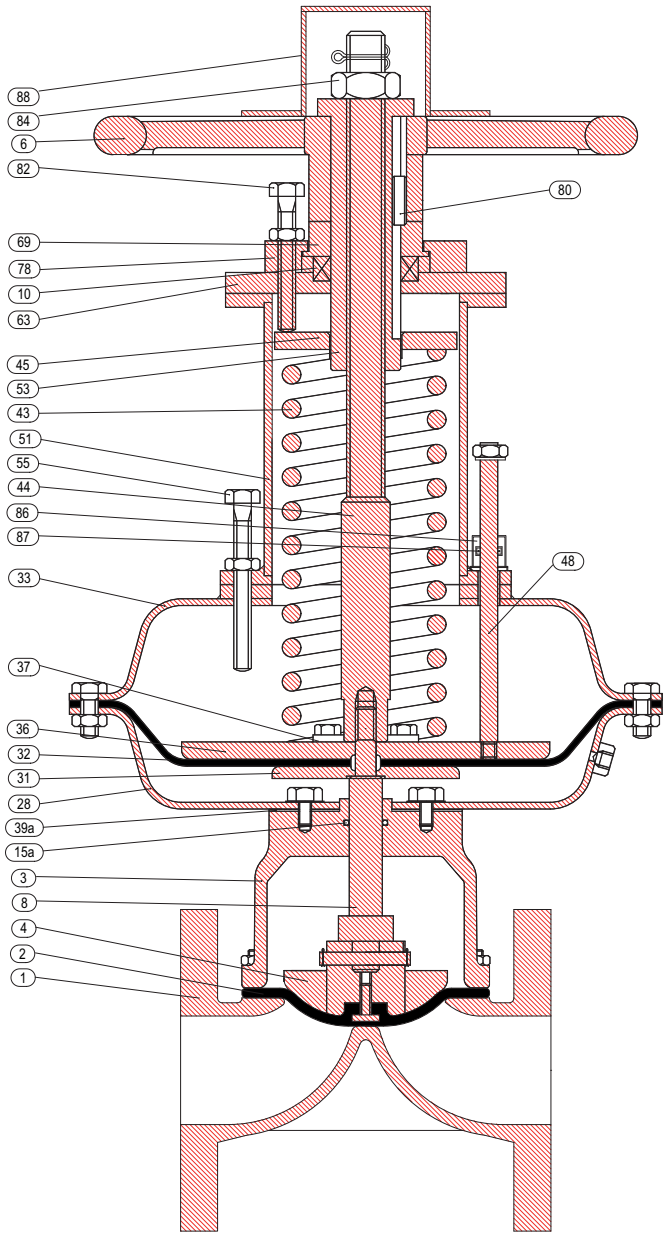

DETAILS	
1	BODY
2	DIAPHRAGM
3	BONNET
4	COMPRESSOR
6	HANDWHEEL
8	STEM
10	BEARING
15A	O RING
28	BOTTOM CHAMBER
31	BOTTOM SUPPORT PLATE
32	AIR DIAPHRAGM
33	TOP CHAMBER
36	TOP SUPPORT PLATE
37	LOCKING WASHER
39A	GASKET
43	SPRING
44	STEM EXTENSION
45	SPRING PLATE
48	PSITION INDICATOR
51	SPRING CHAMBER
53	SLEEVE
55	LIMIT OPENING BOLT OR SCREW
63	TOP COVER
69	HAND WHEEL ADAPTER
78	HOUSING
80	KEY
82	SPRING COMP ADJUSTMENT SCREW
84	HEX.NUT
86	INDICATOR BUSH
87	O RING (FOR INDICATOR BUSH)
88	SLEEVE COVER

PRESSURE RATING
refer technical data

Unlined

dn		15	20	25	40	50	65	80	100	125	150	200	250
ACT.Model	C	←					B						→
BA 1002/12	170	395	405	415	445	470							
BA 2003/04/34	255			495	525	550	570	600	655				
BA 3004/34	338			535	565	590	615	645	700				
BA 3006/56	338			650	680	710	730	760	790	840	900		
BA 6007/56/57/67/6B/AB	415						795	825	855	910	965	1070	
BA 7007/57/67/6B/AB	462						850	870	900	950	1010	1110	
BA 806B/AB	570								955	1005	1065	1165	
BA8009/CD	570								1130	1180	1240	1340	1375
		←					A						→
		108	117	127	159	190	216	254	305	356	406	521	635

Lined

dn		15	20	25	40	50	65	80	100	125	150	200	250
ACT.Model	C	←					B						→
BA 1002/12	170	395	405	415	445	470							
BA 2003/04/34	255			495	525	550	570	600	655				
BA 3004/34	338			535	565	590	615	645	700				
BA 3006/56	338			650	680	710	730	760	790	840	900		
BA 6007/56/57/67/6B/AB	415						795	825	855	910	965	1070	
BA 7007/57/67/6B/AB	462						850	870	900	950	1010	1110	
BA 806B/AB	570								955	1005	1065	1165	
BA8009/CD	570								1130	1180	1240	1340	1375
		←					A						→
		114	123	133	165	196	222	260	313	364	414	529	645

Model GS54 DIN REG

DIAPHRAGM VALVES

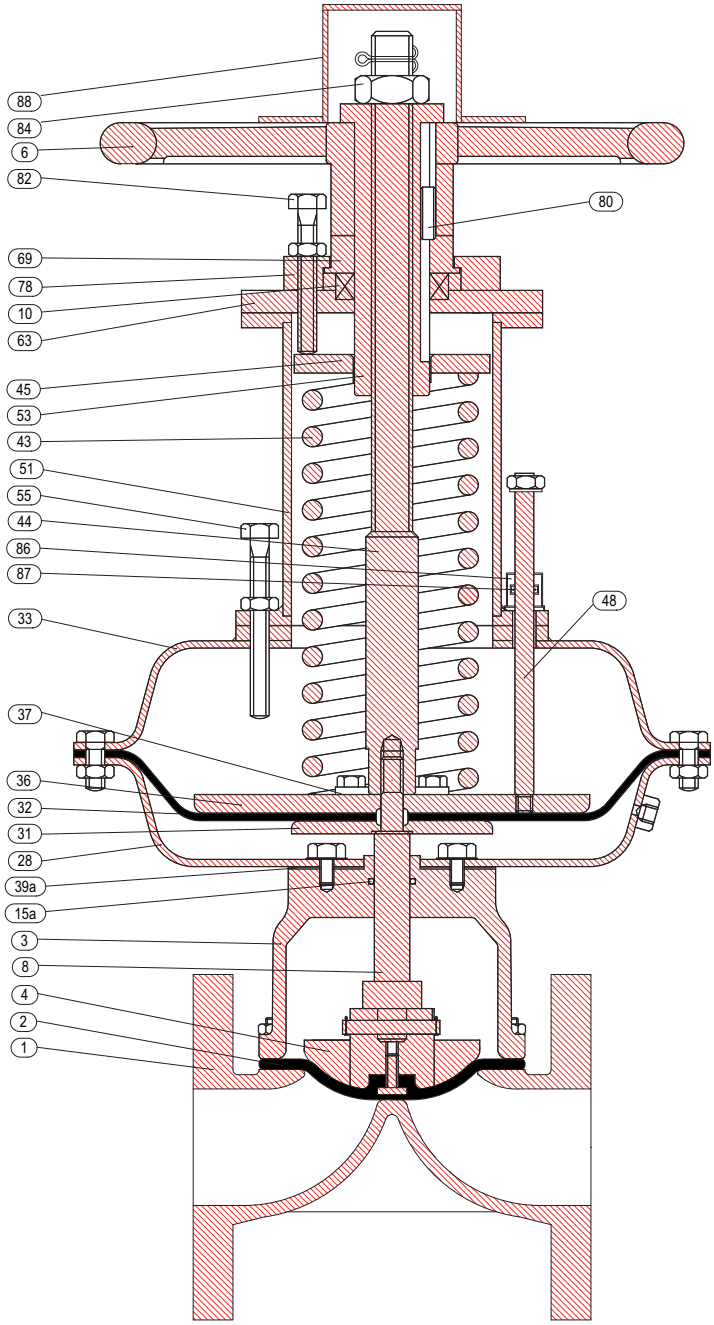

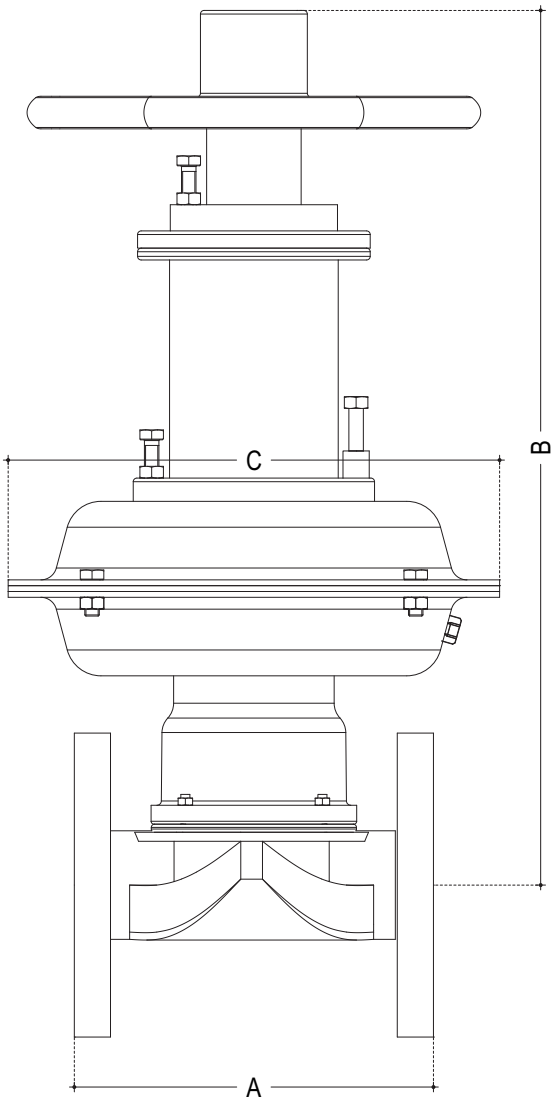

DETAILS

1	BODY
2	DIAPHRAGM
3	BONNET
4	COMPRESSOR
6	HANDWHEEL
8	STEM
10	BEARING
15A	O RING
28	BOTTOM CHAMBER
31	BOTTOM SUPPORT PLATE
32	AIR DIAPHRAGM
33	TOP CHAMBER
36	TOP SUPPORT PLATE
37	LOCKING WASHER
39A	GASKET
43	SPRING
44	STEM EXTENSION
45	SPRING PLATE
48	PSITION INDICATOR
51	SPRING CHAMBER
53	SLEEVE
55	LIMIT OPENING BOLT OR SCREW
63	TOP COVER
69	HAND WHEEL ADAPTER
78	HOUSING
80	KEY
82	SPRING COMP ADJUSTMENT SCREW
84	HEX.NUT
86	INDICATOR BUSH
87	O RING (FOR INDICATOR BUSH)
88	SLEEVE COVER

PRESSURE RATING

refer technical data

Unlined/Lined

dn		15	20	25	40	50	65	80	100	125	150	200	250
ACT.Model	C	←					B						→
BA 1002/12	170	395	405	415	445	470							
BA 2003/04/34	255			495	525	550	570	600	655				
BA 3004/34	338			535	565	590	615	645	700				
BA 3006/56	338			650	680	710	730	760	790	840	900		
BA 6007/56/57/67/6B/AB	415						795	825	855	910	965	1070	
BA 7007/57/67/6B/AB	462						850	870	900	950	1010	1110	
BA 806B/AB	570								955	1005	1065	1165	
BA8009/CD	570								1130	1180	1240	1340	1375
		←					A						→
		130	150	160	200	230	290	310	350	400	480	600	730

Model GS54FB REG

DIAPHRAGM VALVES

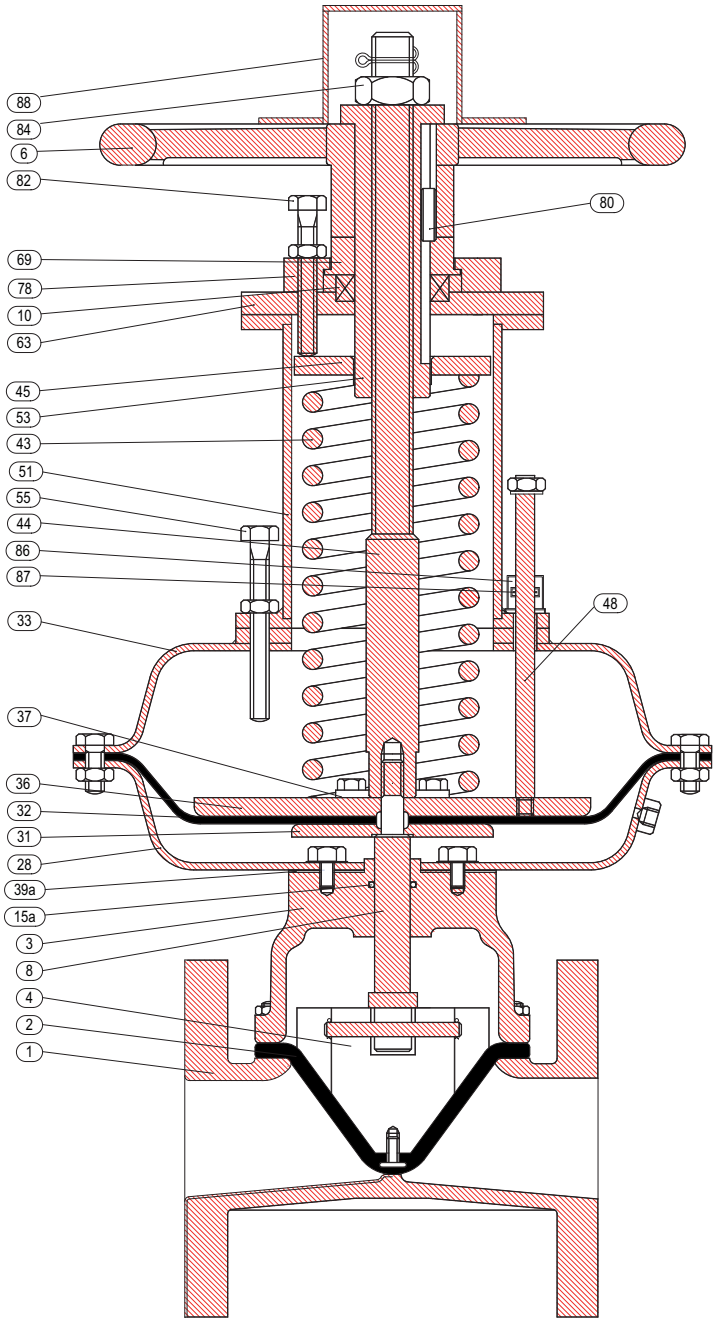

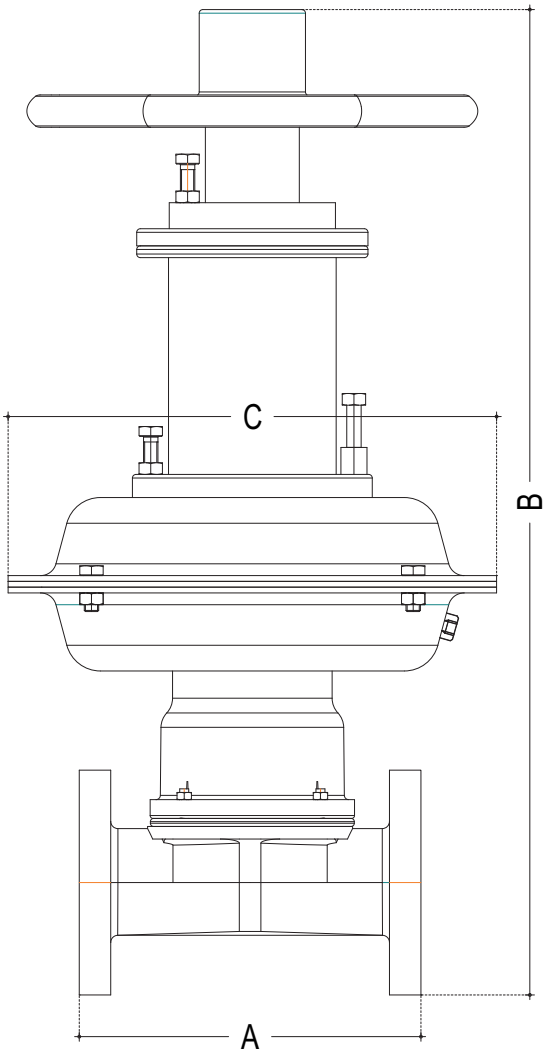

DETAILS

1	BODY
2	DIAPHRAGM
3	BONNET
4	COMPRESSOR
6	HANDWHEEL
8	STEM
10	BEARING
15A	O RING
28	BOTTOM CHAMBER
31	BOTTOM SUPPORT PLATE
32	AIR DIAPHRAGM
33	TOP CHAMBER
36	TOP SUPPORT PLATE
37	LOCKING WASHER
39A	GASKET
43	SPRING
44	STEM EXTENSION
45	SPRING PLATE
48	PSITION INDICATOR
51	SPRING CHAMBER
53	SLEEVE
55	LIMIT OPENING BOLT OR SCREW
63	TOP COVER
69	HAND WHEEL ADAPTER
78	HOUSING
80	KEY
82	SPRING COMP ADJUSTMENT SCREW
84	HEX.NUT
86	INDICATOR BUSH
87	O RING (FOR INDICATOR BUSH)
88	SLEEVE COVER

PRESSURE RATING

refer technical data

Unlined

dn		15	20	25	40	50	65	80	100	125	150	200	250
ACT.Model	C	←					B						→
BA 1002/12	170	395	400	410	410								
BA 2003/04/34	255			495	500	545	560						
BA 3004/34	338					585	600	625					
BA 3006/56	338						715	740	775				
BA 6007/57/67	415						785	810	840				
BA7057/67/AB	462							855	885	1010	1020		
BA 80AB	570								940	1060	1070	1160	
BA80CD/89	570								1115	1235	1245	1340	
		←					A						→
		108	117	127	159	190	216	254	305	356	406	521	

Lined

dn		15	20	25	40	50	65	80	100	125	150	200	250
ACT.Model	C	←					B						→
BA 1002/12	170	395	400	410	410								
BA 2003/04/34	255			495	500	545	560						
BA 3004/34	338					585	600	625					
BA 3006/56	338						715	740	775				
BA 6007/57/67	415						785	810	840				
BA7057/67/AB	462							855	885	1010	1020		
BA 80AB	570								940	1060	1070	1160	
BA80CD/89	570								1115	1235	1245	1340	
		←					A						→
		114	123	133	165	196	222	260	313	364	414	529	

Model GS54FB DIN REG

DIAPHRAGM VALVES

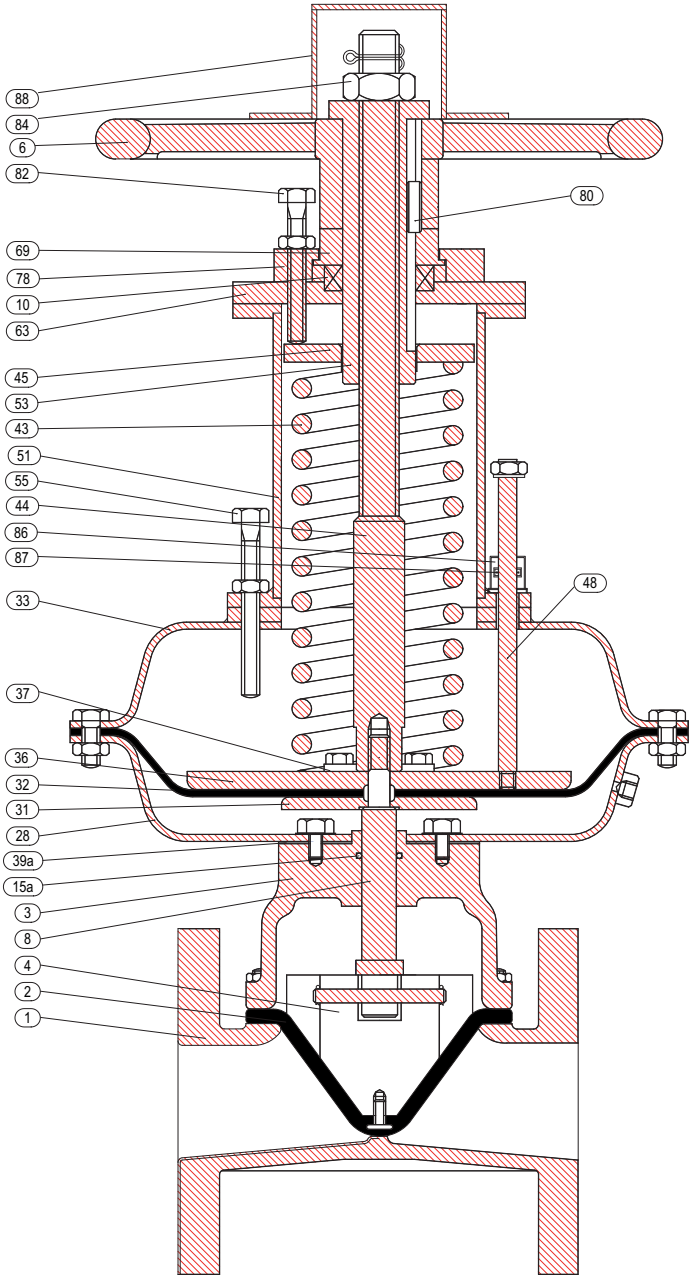

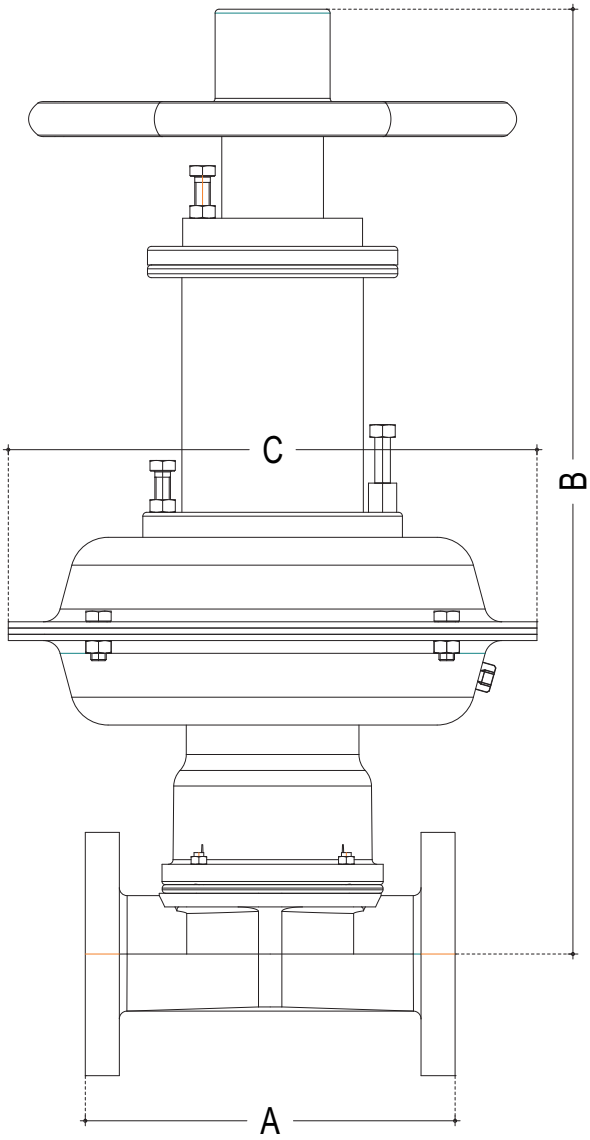

DETAILS

1	BODY
2	DIAPHRAGM
3	BONNET
4	COMPRESSOR
6	HANDWHEEL
8	STEM
10	BEARING
15A	O RING
28	BOTTOM CHAMBER
31	BOTTOM SUPPORT PLATE
32	AIR DIAPHRAGM
33	TOP CHAMBER
36	TOP SUPPORT PLATE
37	LOCKING WASHER
39A	GASKET
43	SPRING
44	STEM EXTENSION
45	SPRING PLATE
48	PSITION INDICATOR
51	SPRING CHAMBER
53	SLEEVE
55	LIMIT OPENING BOLT OR SCREW
63	TOP COVER
69	HAND WHEEL ADAPTER
78	HOUSING
80	KEY
82	SPRING COMP ADJUSTMENT SCREW
84	HEX.NUT
86	INDICATOR BUSH
87	O RING (FOR INDICATOR BUSH)
88	SLEEVE COVER

PRESSURE RATING

refer technical data

Unlined/Lined

dn		15	20	25	40	50	65	80	100	125	150	200	250
ACT.Model	C	←					B						→
BA 1002/12	170	395	400	410	410								
BA 2003/04/34	255			495	500	545	560						
BA 3004/34	338					585	600	625					
BA 3006/56	338						715	740	775				
BA 6007/57/67	415						785	810	840				
BA7057/67/AB	462							855	885	1010	1020		
BA 80AB	570								940	1060	1070	1160	
BA80CD/89	570								1115	1235	1245	1340	
		←					A						→
		130	150	160	200	230	290	310	350	400	480	600	

Model GS55 HW

DIAPHRAGM VALVES

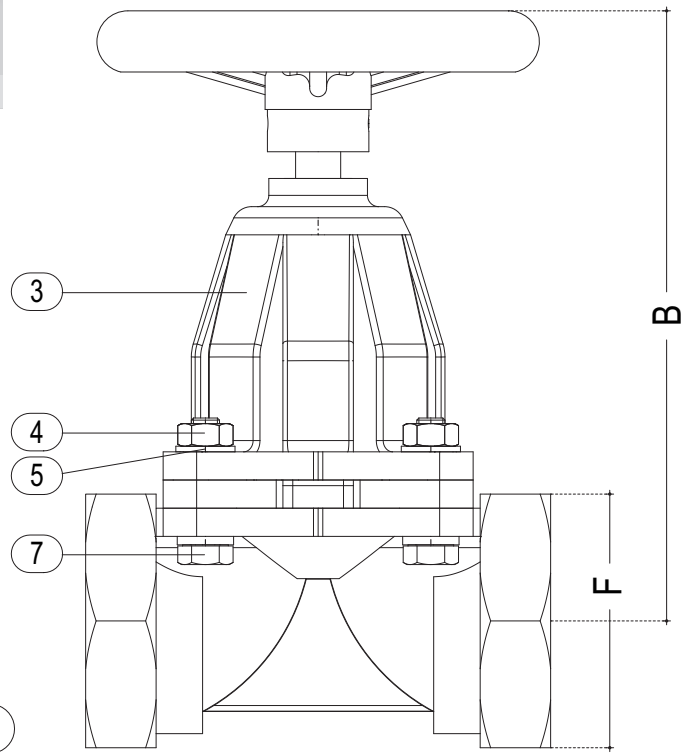

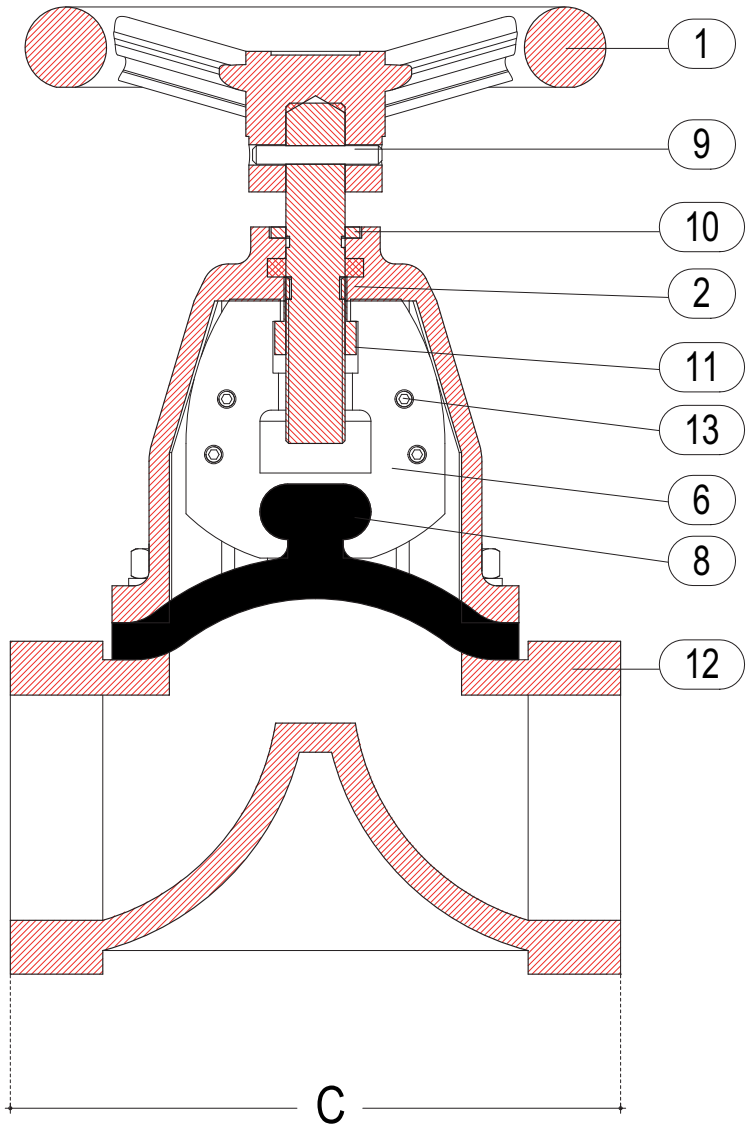

DETAILS	
1	CONTROL WHEEL
2	LEAD SCREW
3	COVER
4	HEXAGON NUT
5	WASHER
6	PLUG
7	BOLT
8	DIAPHRAGM
9	SOCKET
10	GASKET
11	BRONZE NUT
12	VALVE BODY
13	CLAMPING SCREW FOR BUSHING

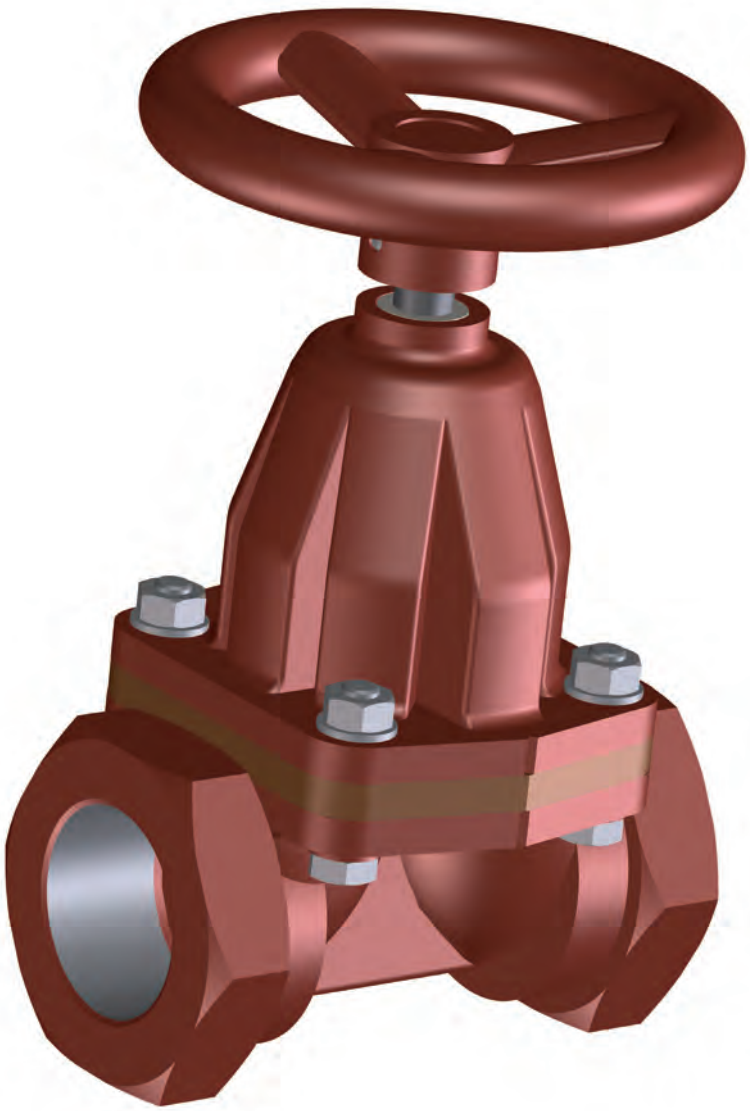

WEIGHT KG C.I
2,400
3,900
4,100
6,700
8,300
12,400
17,600
24,000

DIMENSIONS			
Ø	B	C	F
1/2 GAS	60	50	45
3/4 GAS	73	65	50
1 GAS	125	108	60
1 1/4 GAS	143	121	72
1 1/2 GAS	180	140	80
2 GAS	187	165	90
2 1/2 GAS	232	204	120
3 GAS	260	254	140

PRESSURE DETAILS UNI_1284				
DN	P.N.	HYDRAULIC TEST kg/cm²		WORKING PRESSURE kg/cm²
		OPEN	CLOSE	
1/2 GAS	14	15	14	13
3/4 GAS	14	15	14	13
1 GAS	14	15	14	13
1 1/4 GAS	14	15	14	13
1 1/2 GAS	14	15	14	13
2 GAS	14	15	14	13
2 1/2 GAS	14	15	14	13
3 GAS	14	15	14	13

NOTE: For different pressure details please ask the DPT

Model GS55 REG

DIAPHRAGM VALVES

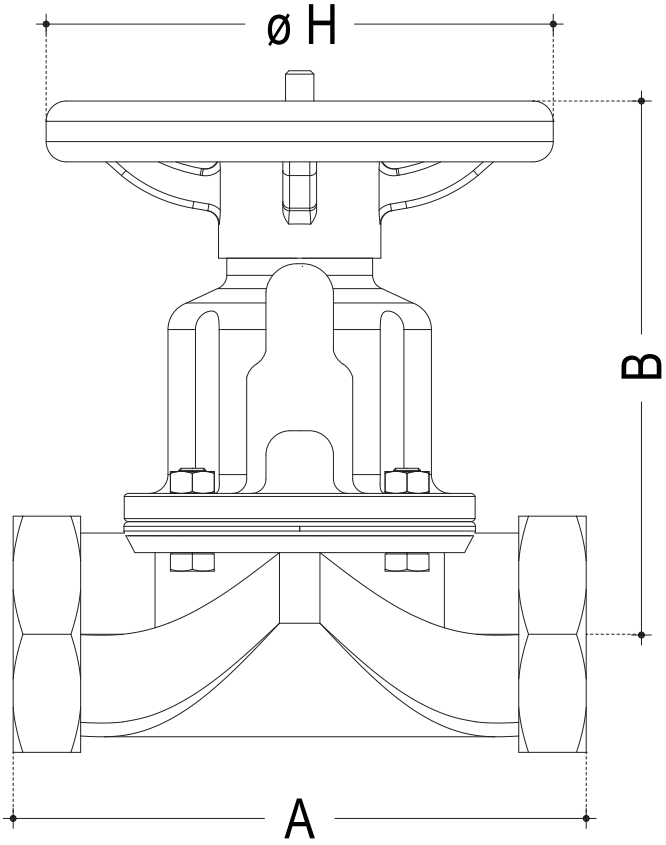

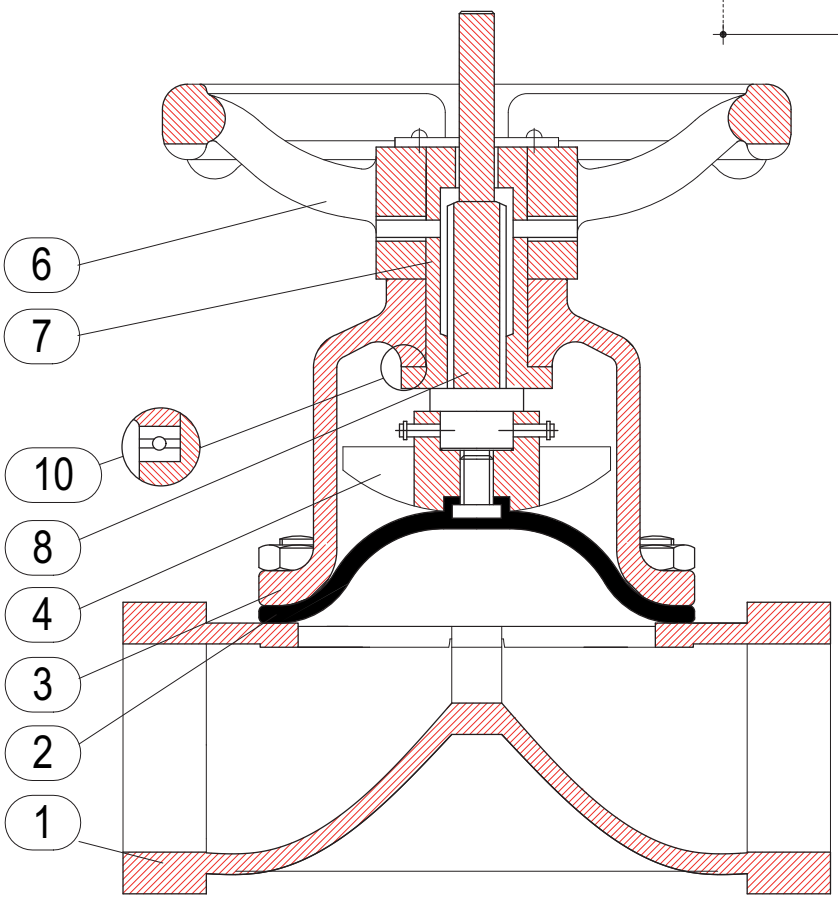

DETAILS	
1	BODY
2	DIAPHRAGM
3	BONNET
4	COMPRESSOR
6	HANDWHEEL
7	STEM BUSHING
8	STEM
10	THRUST BEARING

TEST PRESSURE IN BAR	
PRESSURE RATING	PN10
HYD SHELL	15,75
SEAT	10
AIR SEAT	5,0

WEIGHT KG
0,90
1,80
3,00
3,20
3,50
6,50
10,00
21,00

DIMENSIONS			
DN	A	B	Ø H
15	64	90	70
20	83	90	70
25	108	112	100
32	121	112	100
40	140	112	100
50	165	146	140
65	203	177	180
80	254	205	225

Model GS55FB REG

DIAPHRAGM VALVES

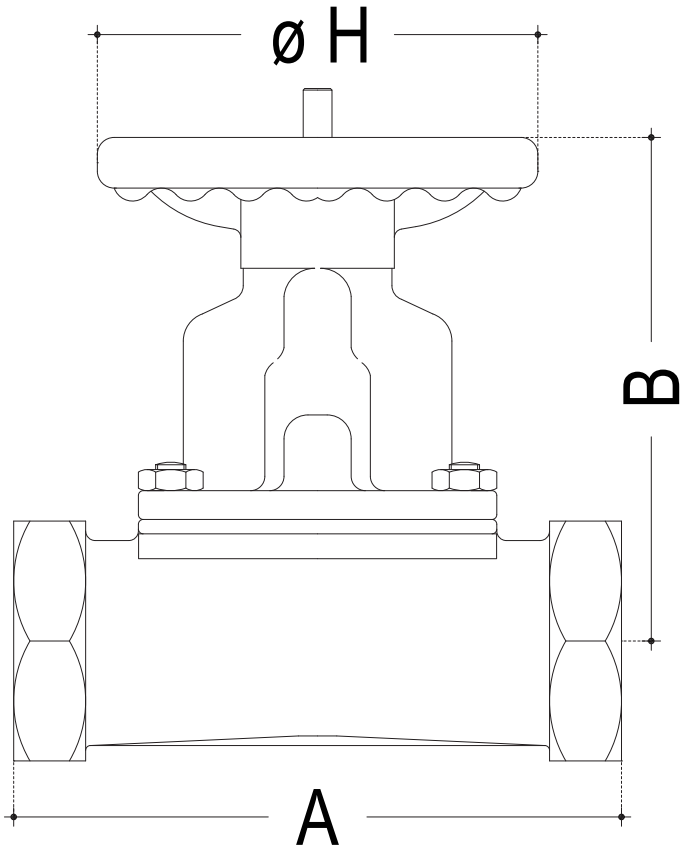

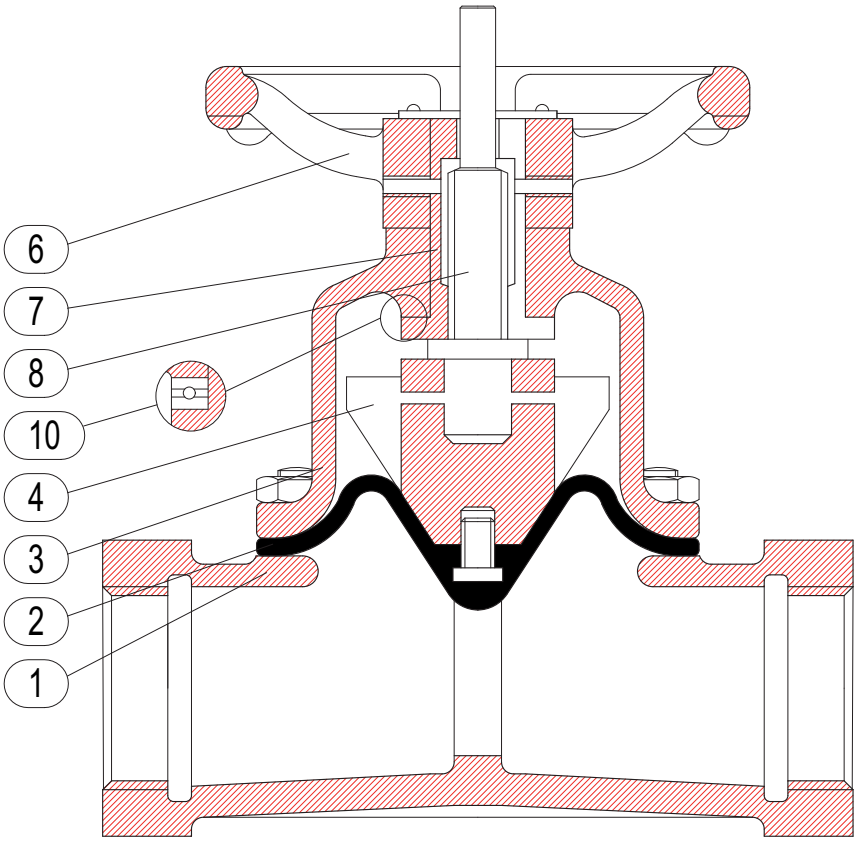

DETAILS	
1	BODY
2	DIAPHRAGM
3	BONNET
4	COMPRESSOR
6	HANDWHEEL
7	STEM BUSHING
8	STEM
10	THRUST BEARING

TEST PRESSURE IN BAR	
PRESSURE RATING	PN10
HYD SHELL	15,75
SEAT	10
AIR SEAT	5,0

WEIGHT KG
0,90
1,80
3,00
3,20
3,50
6,50
10,00
21,00

DIMENSIONS			
DN	A	B	Ø H
15	64	90	70
20	83	90	70
25	108	112	100
32	121	112	100
40	140	112	100
50	165	146	140
65	203	177	180
80	254	205	225

Model GS56 HW

DIAPHRAGM VALVES

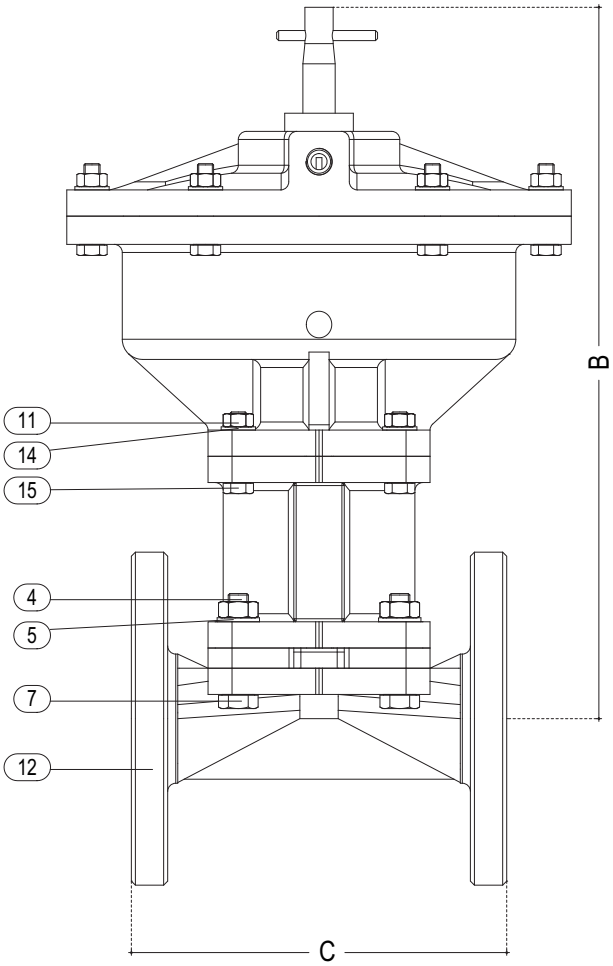

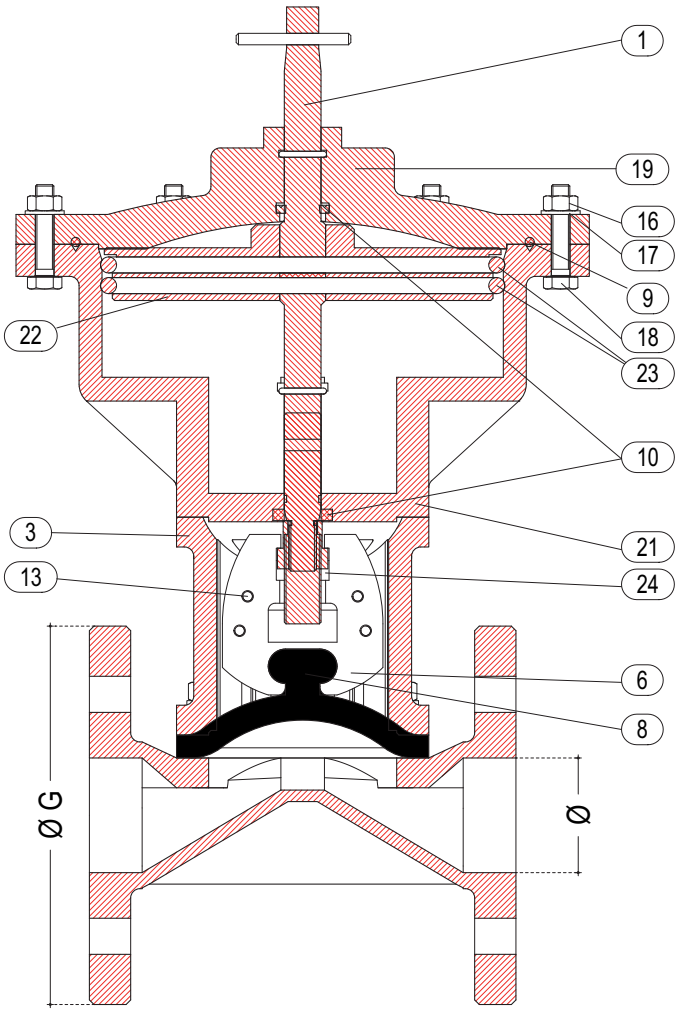

DETAILS	
1	INDICATOR POSITION
2	
3	SUPPORT
4	HEXAGON NUT
5	WASHER
6	PLUG
7	STUD BOLT
8	DIAPHRAGM
9	GASKET
10	"V"GASKET
11	HEXAGON NUT
12	VALVE BODY
13	HEXAGON BOLT
14	WASHER
15	HEXAGON BOLT
16	HEXAGON NUT
17	WASHER
18	HEXAGON BOLT
19	COVER
20	DRIVE PIN
21	CYLINDER
22	PISTON
23	"V"GASKET
24	BRONZE NUT

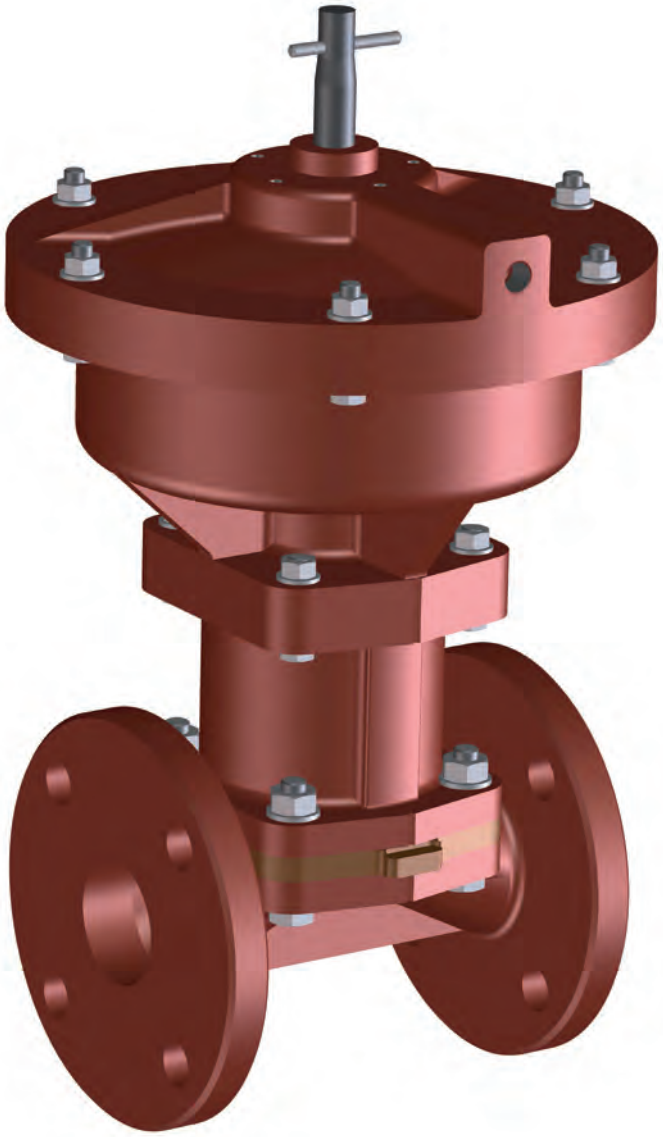

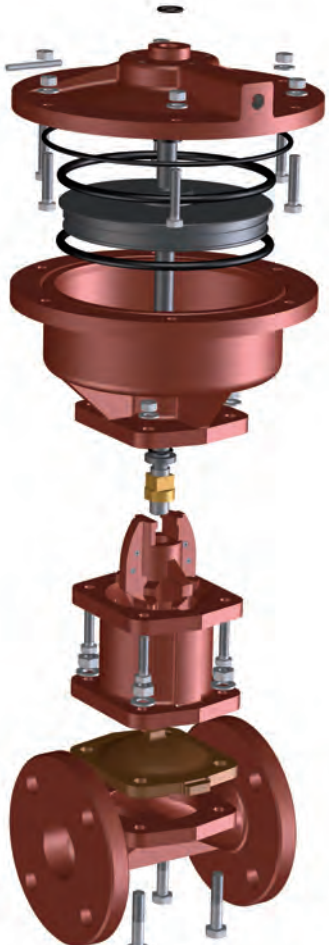

PRESSURE DETAILS UNI_1284

DN	P.N.	HYDRAULIC TEST kg/cm² OPEN	HYDRAULIC TEST kg/cm² CLOSE	WORKING PRESSURE kg/cm²
20	5	15	5	4
25	5	15	5	4
30	5	15	5	4
40	5	15	5	4
50	4,5	15	4,5	3,5
60	4,5	15	4,5	3,5
75	4,5	15	4,5	3,5
100	4,5	15	4,5	3,5
125	4	13	4	3
150	4	13	4	3
200	3	13	3	2
250	4	13	3	2
300	3	10	3	2

NOTE: For different pressure details please ask the DPT

WEIGHT KG

C.I unlined	C.I. ebonite lined
6,400	7,300
7,000	7,800
9,500	10,000
11,500	12,000
16,000	17,000
23,000	24,000
30,000	30,000
55,000	57,000
80,000	82,000
110,000	112,000
220,000	222,000
270,000	276,000
350,000	364,000

DIMENSIONS C.I. UNLINED

Ø	B	C(UNLINED)	G(UNI)	G(ASA)
20	230	117	105	98
25	230	127	115	108
30	280	146	140	118
40	330	159	150	127
50	350	190	165	152
60	410	217	185	178
75	450	254	200	190
100	540	305	220	229
125	665	356	250	254
150	710	406	285	280
200	950	520	340	343
250	1180	635	395	406

DIMENSIONS C.I. EBONITE LINED

Ø	B	L(UNLINED)	G(UNI)	G(ASA)
20	230	123	105	98
25	230	133	115	108
30	280	152	140	118
40	330	165	150	127
50	350	196	165	152
60	410	227	185	178
75	450	260	200	190
100	540	313	220	229
125	665	364	250	254
150	710	414	285	280
200	950	530	340	343
250	1180	645	395	406

Model GS56FB DE REG

DIAPHRAGM VALVES

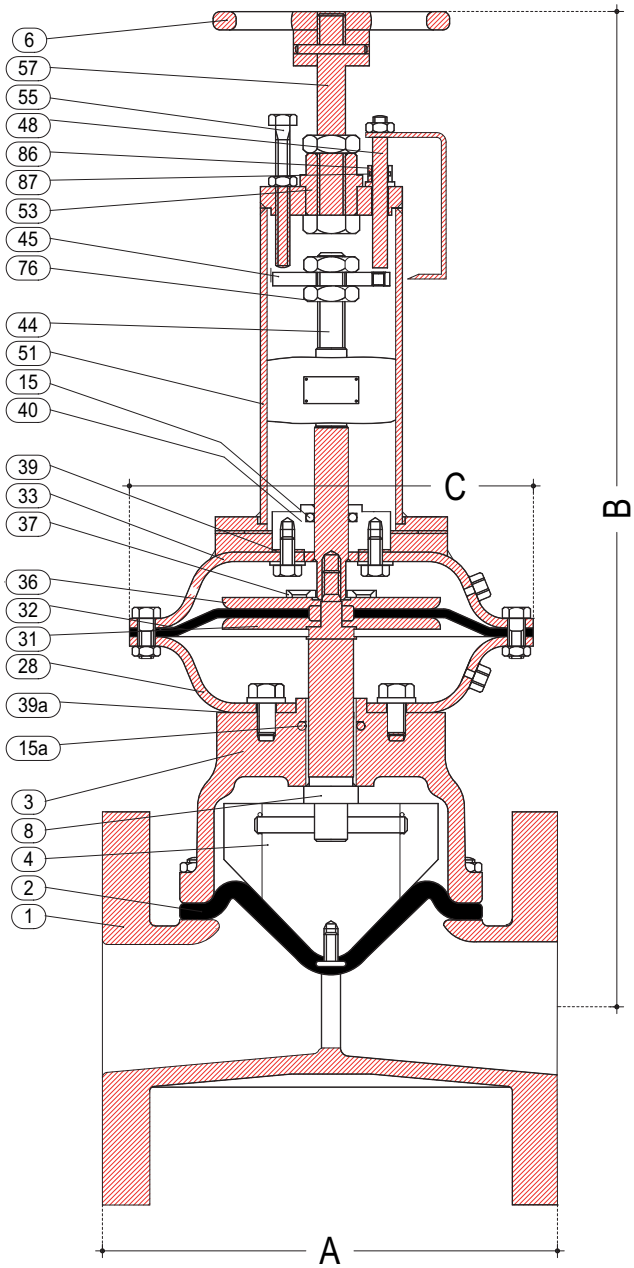

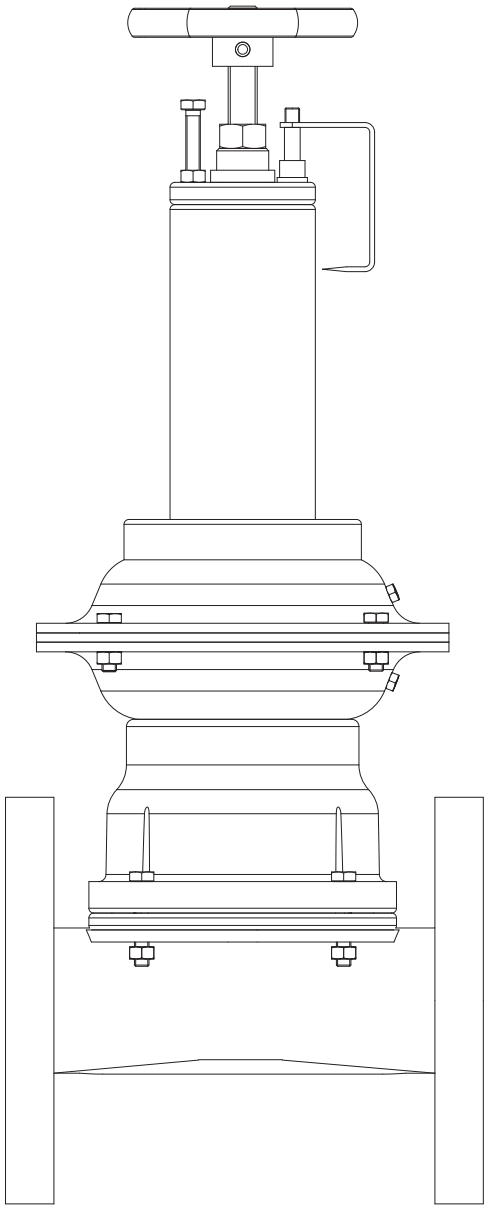

DETAILS

1	BODY
2	DIAPHRAGM
3	BONNET
4	COMPRESSOR
6	HANDWHEEL
8	STEM
15	O RING
28	BOTTOM CHAMBER
31	BOTTOM SUPPORT PLATE
32	AIR DIAPHRAGM
33	TOP CHAMBER
36	TOP SUPPORT PLATE
37	LOCKING WASHER
39	GASKET
40	SPRING SEAT
44	STEM EXTENSION
45	TOP PLATE
48	PSITION INDICATOR
51	SPRING CHAMBER
53	SLEEVE
55	LIMIT OPENING BOLT OR SCREW
57	SPINDLE
86	INDICATOR BUSH
87	O RING

PRESSURE RATING

refer technical data

Unlined

dn		15	20	25	40	50	65	80	100	125	150	200	250
Act Model	C	←					B						→
BA13	170	135	140	155	155								
BA23	255			190	190	215	250	260					
BA33	338					240	275	285	320				
BA63	415						300	310	345	415	425		
BA73	462								355	435	445	625	
BA83	570									485	495	675	
		←					A						→
		108	117	127	159	190	216	254	305	356	406	521	

Lined

dn		15	20	25	40	50	65	80	100	125	150	200	250
Act Model	C	←					B						→
BA13	170	135	140	155	155								
BA23	255			190	190	215	250	260					
BA33	338					240	275	285	320				
BA63	415						300	310	345	415	425		
BA73	462								355	435	445	625	
BA83	570									485	495	675	
		←					A						→
		114	123	133	165	196	222	260	313	364	414	529	

Model GS56FB DE DIN REG

DIAPHRAGM VALVES

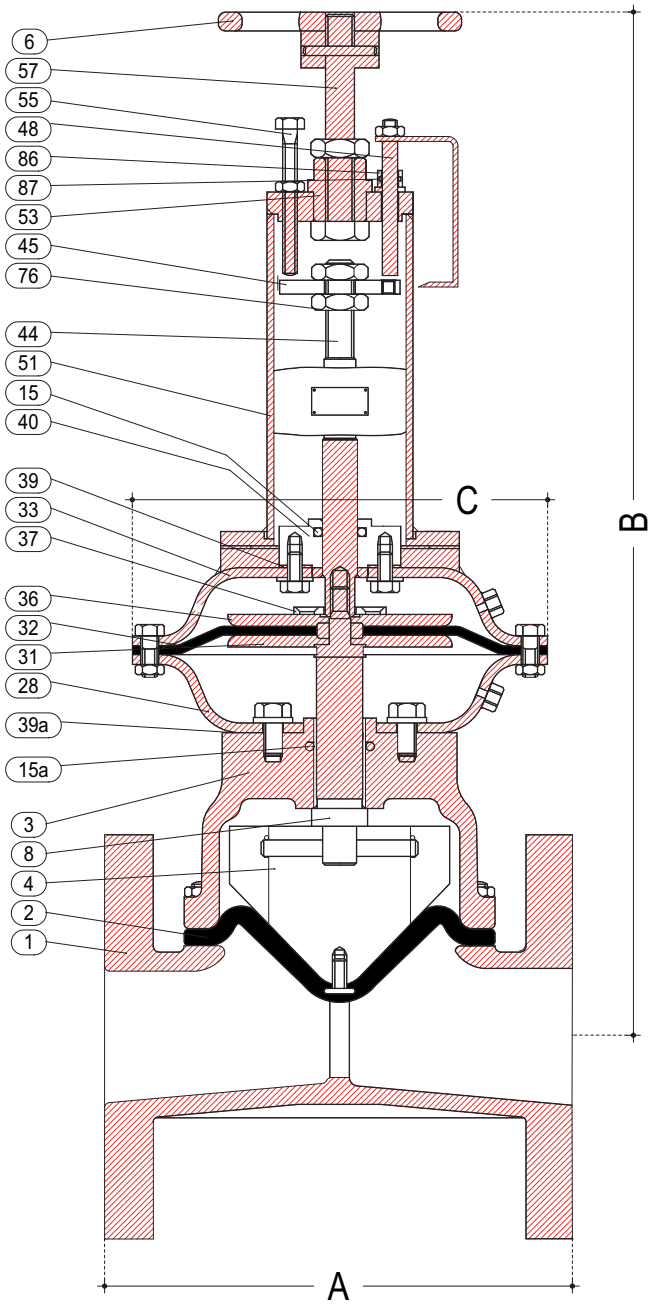

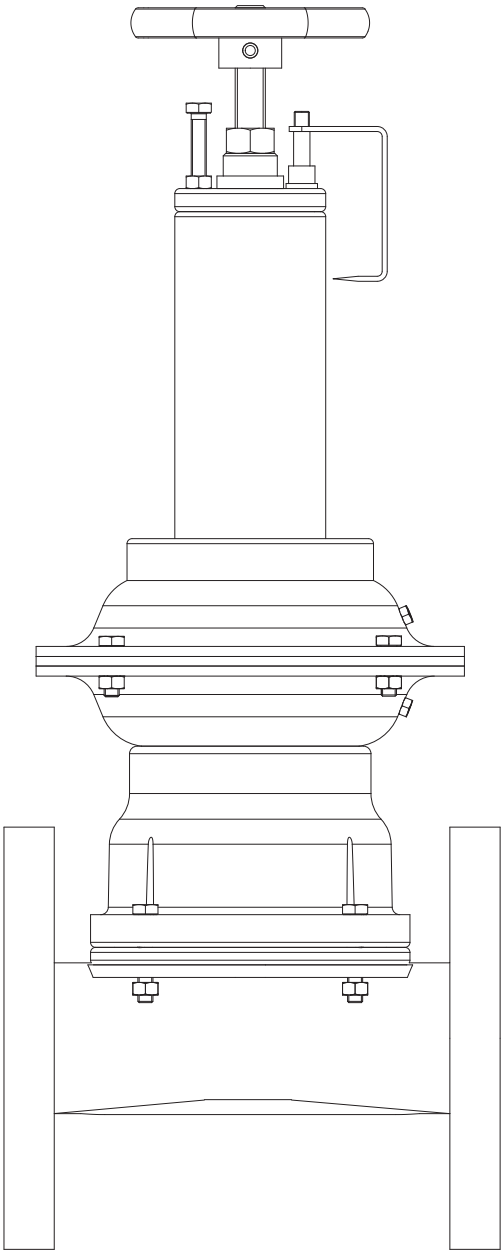

DETAILS

1	BODY
2	DIAPHRAGM
3	BONNET
4	COMPRESSOR
6	HANDWHEEL
8	STEM
15	O RING
28	BOTTOM CHAMBER
31	BOTTOM SUPPORT PLATE
32	AIR DIAPHRAGM
33	TOP CHAMBER
36	TOP SUPPORT PLATE
37	LOCKING WASHER
39	GASKET
40	SPRING SEAT
44	STEM EXTENSION
45	TOP PLATE
48	PSITION INDICATOR
51	SPRING CHAMBER
53	SLEEVE
55	LIMIT OPENING BOLT OR SCREW
57	SPINDLE
86	INDICATOR BUSH
87	O RING

PRESSURE RATING

refer technical data

Unlined/Lined

dn		15	20	25	40	50	65	80	100	125	150	200	250
Act Model	C	←					B						→
BA13	170	135	140	155	155								
BA23	255			190	190	215	250	260					
BA33	338					240	275	285	320				
BA63	415						300	310	345	415	425		
BA73	462								355	435	445	625	
BA83	570									485	495	675	
		←					A						→
		130	150	160	200	230	290	310	350	400	480	600	

Model GS56DE REG

DIAPHRAGM VALVES

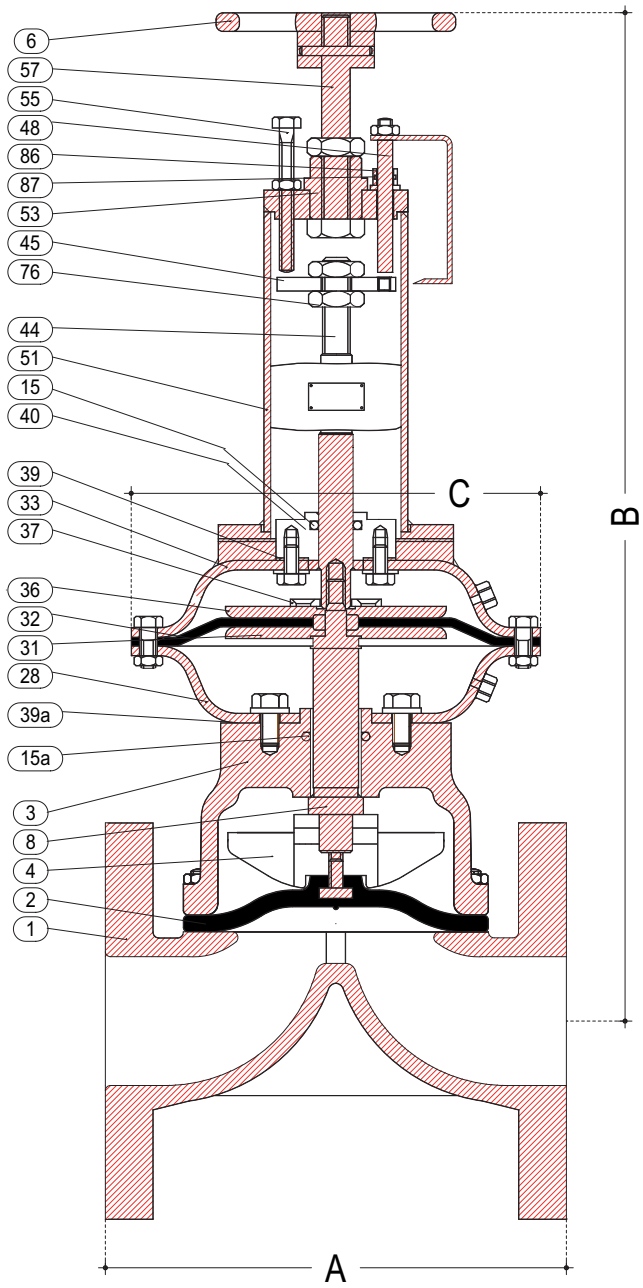

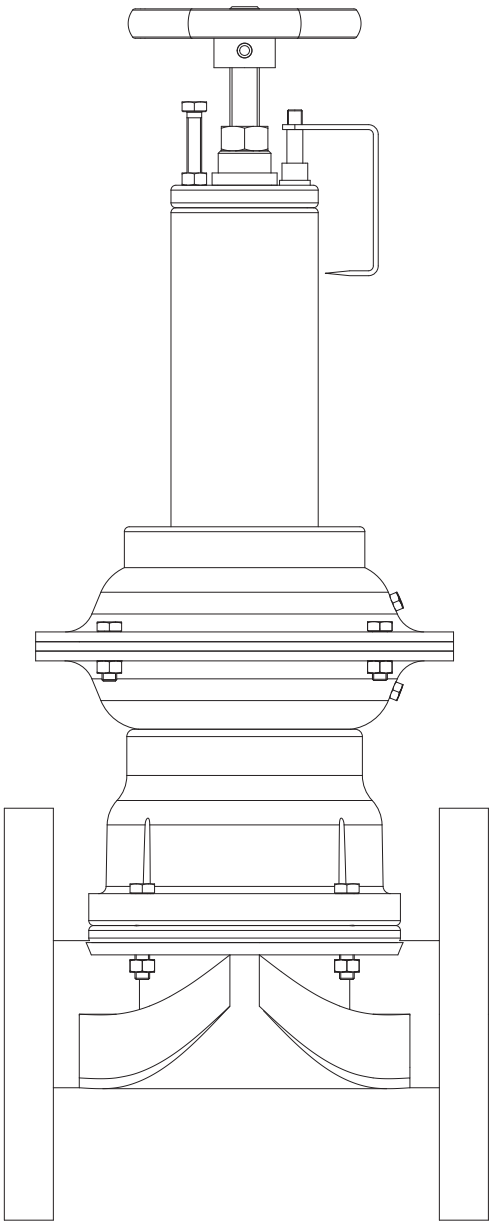

DETAILS

1	BODY
2	DIAPHRAGM
3	BONNET
4	COMPRESSOR
6	HANDWHEEL
8	STEM
15	O RING
28	BOTTOM CHAMBER
31	BOTTOM SUPPORT PLATE
32	AIR DIAPHRAGM
33	TOP CHAMBER
36	TOP SUPPORT PLATE
37	LOCKING WASHER
39	GASKET
40	SPRING SEAT
44	STEM EXTENSION
45	TOP PLATE
48	PSITION INDICATOR
51	SPRING CHAMBER
53	SLEEVE
55	LIMIT OPENING BOLT OR SCREW
57	SPINDLE
86	INDICATOR BUSH
87	O RING

PRESSURE RATING

refer technical data

Unlined

dn		15	20	25	40	50	65	80	100	125	150	200	250
Act Model	C	←					B						→
BA13	170	125	135	145	170	185							
BA23	255			180	205	220	240	260	285	320			
BA33	338			205	230	245	265	285	310	340	395	480	
BA63	415						290	310	335	365	415	500	
BA73	462							320	345	375	425	510	585
BA83	570								390	420	470	555	625
		←					A						→
		108	117	127	159	190	216	254	305	356	406	521	635

Lined

dn		15	20	25	40	50	65	80	100	125	150	200	250
Act Model	C	←					B						→
BA13	170	125	135	145	170	185							
BA23	255			180	205	220	240	260	285	320			
BA33	338			205	230	245	265	285	310	340	395	480	
BA63	415						290	310	335	365	415	500	
BA73	462							320	345	375	425	510	585
BA83	570								390	420	470	555	625
		←					A						→
		114	123	133	165	196	222	260	313	364	414	529	645

Model GS56DE DIN REG

DIAPHRAGM VALVES

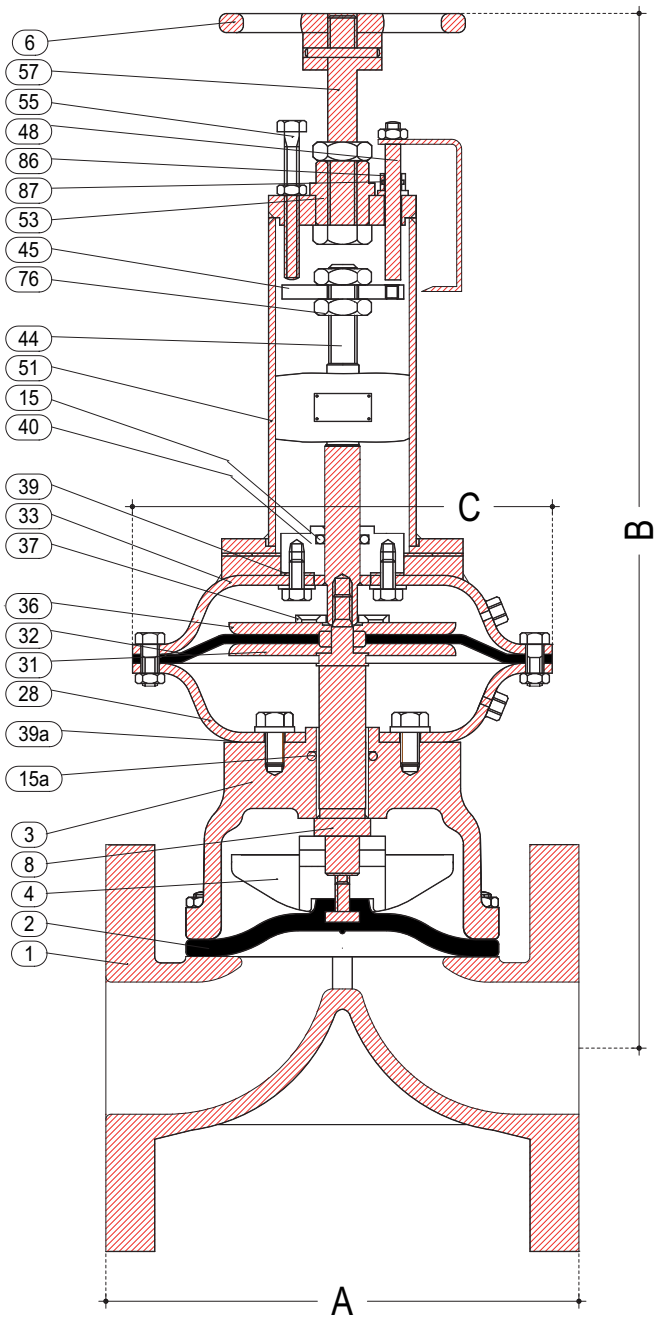

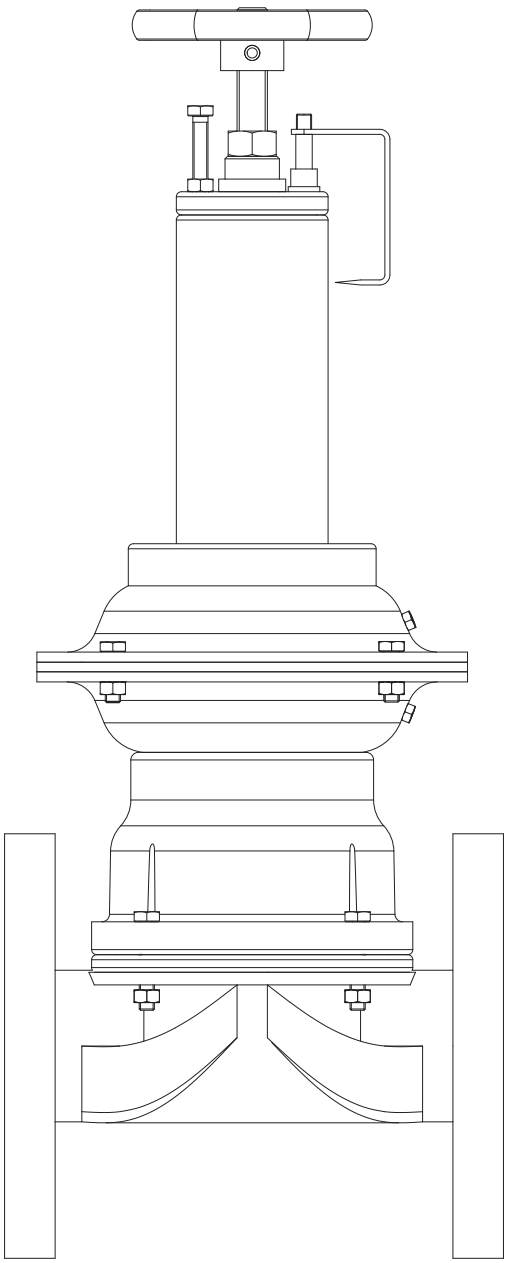

DETAILS

1	BODY
2	DIAPHRAGM
3	BONNET
4	COMPRESSOR
6	HANDWHEEL
8	STEM
15	O RING
28	BOTTOM CHAMBER
31	BOTTOM SUPPORT PLATE
32	AIR DIAPHRAGM
33	TOP CHAMBER
36	TOP SUPPORT PLATE
37	LOCKING WASHER
39	GASKET
40	SPRING SEAT
44	STEM EXTENSION
45	TOP PLATE
48	PSITION INDICATOR
51	SPRING CHAMBER
53	SLEEVE
55	LIMIT OPENING BOLT OR SCREW
57	SPINDLE
86	INDICATOR BUSH
87	O RING

PRESSURE RATING

refer technical data

Unlined/Lined

dn		15	20	25	40	50	65	80	100	125	150	200	250
Act Model	C	←					B						→
BA13	170	125	135	145	170	185							
BA23	255			180	205	220	240	260	285	320			
BA33	338			205	230	245	265	285	310	340	395	480	
BA63	415						290	310	335	365	415	500	
BA73	462							320	345	375	425	510	585
BA83	570								390	420	470	555	625
		←					A						→
		130	150	160	200	230	290	310	350	400	480	600	730

REGONELLI MONZA 03/13

Galassi & Ortolani Spa has been making special valves since 1937.
The range of products, comprising:
- diaphragm valves
- pinch valves
- butterfly valves
- check valves
- pneumatic actuators
- ball valves
- gate valves
- thermoplastic valves

is divided into several versions and variants and is used, in particular, in the chemical industry, in water processing and distribution.
The experience achieved during over 75 years in the making of valves for various-nature fluid-management plants has allowed Galassi & Ortolani to make a name in the plant-construction market as a reference producer both at domestic and international level.

ARTISANS OF YEAR 2000
- Uni En ISO 9001 Quality Management System Certified
- Choice of ISO certified suppliers who utilize the latest casting technologies
- Check of all incoming components so as to find and eliminate those defective
- Check of all machined products for conformance to our dimensional standards
- Hydraulic test of body valve at 110/115% of rated pressure to ensure the best tightness
- Each valve being coated with an anti-corrosive varnish at no additional cost

CNC PROCESS
Equipment for Machining Centres and CN Lathes
- To have the utmost control possible on each component
- To allow total interchangeability of each component in case it is changed
- To ensure valve perfect stability and connection
- To reduce Torque rating

CUSTOMER HELP
- Customer's personalized treatment, both pre-sales and after-sales
- Direct intervention by our experts on Plants upon request
- Extensive store of spare parts for immediate availability

CISQ

IQNet
THE INTERNATIONAL CERTIFICATION NETWORK

SINCERT
ACCREDITAMENTO ORGANISMI DI CERTIFICAZIONE E ISPEZIONE

ISO 9001:2000
Registr. n° IT 44453

GALASSI&ORTOLANI
VALVESMANUFACTURE**DIVISION**

GALASSI & ORTOLANI SpA
Via Ghirlandaio, 2/4 - 20096 Pioltello (MI) Italy
Tel. +39 02.92103459 - 02.92103801 - 02.92103802 - Fax +39 02.92103804
E-mail:info@galassiortolani.com - www.galassiortolani.com